RE 96720/2025-11-05
Replaces: 2025-07-31

eLION motor EMP1

- Permanent magnet synchronous reluctance motor (PMSRM)
- Nominal power range: 27 to 152 kW
- Continuous torque: 120 to 400 Nm
- Maximum speed range: 10500 rpm
- Nominal voltage range from 400 to 750 VDC
- High operational efficiency (max. > 96%)
- Protection class IP6K7 / P6K9K
- Ambient temperature range: –40 to +100 °C
- Fluid cooled with inlet temperature up to 65 °C
- Motor and generator operation

Features

- Modular and scalable design based on diameter, length, and number of windings
- Heavy-duty design for off-highway applications
- Designed for various functions including travel, working, and slew drives, etc.
- Standardized mechanical interface for direct gear unit, ICE, or pump connection
- Resolver as a robust feedback sensor

Contents

Motor selection overview	2
Product description	3
Ordering code	4
General technical data	6
Technical data EMP1-13	7
Power data EMP1-13	9
Sensors	54
Electrical connections	55
Operating ranges and characteristic curves	56
Dimensions	57
Mounting type	67
General	67

Motor selection overview

The torque and power summary of the EMP1 gives an overview of the torque and power of the EMP1-13 motors at a nominal voltage of 700 VDC.
Detailed values and characteristic curves for each motor size, length, and winding are listed in the chapters "General technical data", "Technical data EMP1-13."

▼ **Torque and power overview EMP1**[1)]

eLION motor type	Length	Maximum rotational speed ▶ n_{max} [rpm]		Speed range: Up to 10500		
		Nominal rotational speed ▶ n_{nom} [rpm]		2000	3000	4000
		Torque▼ M_0[Nm][2)]	M_{max}[Nm]	Continuous power[3)] ▼ P_{nom} [kW]		
EMP1-13	D	133	333	27	39	50
	F	209	498	42	59	77
	H	280	665	56	81	100
	J	354	832	69	100	126
	L	424	997	84	118	152

1) Provisional data
2) M_0 stands for "torque at low rotational speed"
3) Calculated with a voltage of 700 VDC

Product description

The eLION EMP1 motor is a permanent magnet synchronous reluctance motor. It is designed for the harsh environments in which off-highway machines are used. The motor is available with two different diameters and with variable length and nominal speed. The product range is currently being expanded with two additional diameters.
Due to its mechanical design, the motor can be adapted to various machine functions, e.g. traction, gearbox connection, axle connection, and electrohydraulic devices.

Selection of the frame size, length, and winding of the motor

The thermal equivalent torque (RMS torque) and the average rotational speed of the load cycles are required to select the right motor. This simplified calculation does not take into account the thermal time constant of the motor. It is sufficient if the overload time of each section of the torque requirement is shorter than the thermal time constant of the motor. For the calculations, the load must be separated into sections with torque over time. The equivalent thermal torque can be calculated using the following formula:

$$M_{\text{RMS}} = \sqrt{\frac{1}{T} \times \sum_{i=1}^{n} M_i^2 \, \Delta t_i}$$

$$n_{\text{avg}} = \frac{1}{T} \times \sum_{i=1}^{x} n_i \, \Delta t_i$$

The thermally equivalent torque can then be inserted into the torque-rotational speed diagram of the selected motor. This operating point must then be below the curve M_{S1}. All operating points of the load cycles must be within the maximum torque and speed capabilities of the motor.

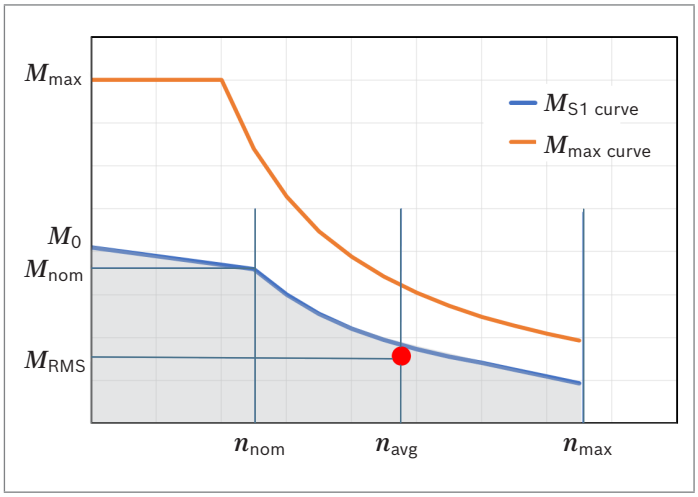

Ordering code

01		02	03	04	05	06		07	08	09		10	11	12	13	14		15		16
EMP1	**–**	**13**			**L**	**M7**	**–**	**R**	**S**		**–**			**N**	**N**	**NNNN**	**–**		**–**	**NN**

Product

01	eLION motor	**EMP1**

Axle height

02	130 mm	**13**

Length

03	Active length 100 mm	**D**
	Active length 150 mm	**F**
	Active length 200 mm	**H**
	Active length 250 mm	**J**
	Active length 300 mm	**L**

Nominal rotational speed

04	2000 rpm	**20**
	3000 rpm	**30**
	4000 rpm	**40**

Cooling

05	Liquid cooling	Connection G1/2	**L**

Design

06	Motor, 700 V	**M7**

Encoder type

07	Resolver	**R**

Encoder design

08	Single turn, 1 rotation, absolute	**S**

Electrical connection

09	Terminal box		Single input UVW, input direction A/B	**AB**
	Single connector C1	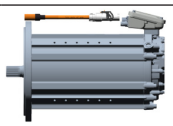	UVW, motor output for straight connection in the direction of the A-shield	**C1**
	Single connector C2	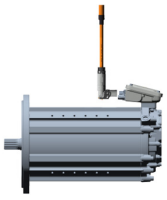	UVW, motor output for upward angled connection in the direction of the A-shield	**C2**
	Single connector C3	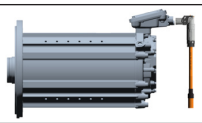	UVW, motor output for downward angled or straight connection in the direction of the B-shield	**C3**
	Single connector C4	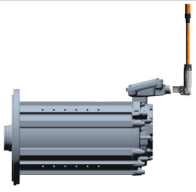	UVW, motor output for upward angled connection in the direction of the B-shield	**C4**

01		02	03	04	05	06		07	08	09		10	11	12	13	14		15		16
EMP1	**–**	**13**			**L**	**M7**	**–**	**R**	**S**		**–**			**N**	**N**	**NNNN**	**–**		**–**	**NN**

Shaft/hub design

10	External spline shaft 2 for motor (according to DIN 5480)	W 40 × 2 × 18 × 9d	**W2**
	Internal-splined shaft 2 for pumps (according to ANSI B92.1)	N1 1/4 14T 12/24 DP	**N2**
	Internal-splined shaft 6 for gearbox (according to ANSI B92.1)	N1 1/4 14T 12/24 DP	**N6**

Flange

11	Motor flange (according to SAE J617)	SAE 5	**M5**
	Pump flange (according to SAE J744)	127-2 (C), 45° steps	**P3**
		127-4 (C), 45° steps	**P4**
	Gearbox flange (according to SAE J617)	SAE 5	**G3**

Bearing

12	Standard	**N**

Mounting type

13	Flange mounting B5, including threaded holes for foot mounting B35	**N**

Attachments / Equipment

14	Standard	**NNNN**

Coating / Label

15	No coating, standard label	**NN**
	No coating, individual label	**MN**
	Standard coating, standard label	**BN**
	Standard coating, individual label (see data sheet 90314 "Standard coating of axial piston units")	**CU**

Other version

16	Standard	**NN**

▼ **Possible shaft/hub flange combinations**

	Flange			
Shaft/hub	**M5**	**P3**	**P4**	**G3**
W2	●	–	–	–
N2	–	●	●	–
N6	–	–	–	●

● = Possible – = Not possible

General technical data

The technical data are standard values. The tolerances that occur due to deviations of electrical properties can be found in the section "General tolerances". The shown data are for a DC-voltage of 700VDC. Please contact your local sales representative for data sheets with other voltages.

General tolerances

The values specified in the technical data are subject to natural dispersion. For the following parameters, the tolerance specifications must be observed.

Designation	Symbol	Tolerance value
S1 continuous torque at 200 rpm	$M_{S1,\ low\ rotational\ speed}$	± 5%
S1 continuous torque at n_{nom}	$M_{S1,\ nnom}$	± 5%
S1 continuous power at n_{nom}	$P_{S1,\ nnom}$	± 5%
S2 for 60 s torque (maximum torque)	$M_{S2,\ 60\ s}$	± 5%
Maximum short circuit braking torque	$M_{max,\ sc}$	± 5%
Phase-phase voltage constant at 20 °C	k_{EMK}	± 5%
Torque constant at 25 °C	k_T	± 5%
Rotor inertia	J_{rot}	± 10%

Operating environment conditions

Parameter		Unit	Value
Ambient temperature range according to ISO 16750-4		°C	−40 ... +100, Code J
Climatic, according to ISO 16750-4			Code O
Relative humidity according to IEC 60068-2-38		°C	25±2 K at 80 ... 96% relative humidity 25±2 K at 93±3% relative humidity 55±2 K at ≤ 20% relative humidity 65±2 K at 93±3% relative humidity Tested: in 10 cycles of 24 h each
Protection class according to ISO 20653	open shaft		IP6K7
	assembled unit		IP6K9K
Vibration (sinusoidal)[1]		g	10 (10 ... 2000 Hz) Tested: 8 h per axis, in 20 min sweeps
Vibration (random noise) according to ISO 16750-3, test 2 (passenger car, gearbox)		g	10.65 RMS (5 ... 2000 Hz) Tested: 8 h per axis
Shock (non-recurring)		g	50 (11 ms) Tested: 3 shocks in all directions and axes (total: 18 shocks)
Shock (recurring)		g	25 (6 ms) Tested: 1000 shocks in all directions and axes (total: 6000 shocks)
Maximum altitude above sea level (NHN)			Up to 4000 m above sea level without throttling
Chemical loads, based on ISO 16750-5			Code A and code D Additional fluids tested: saltwater, motor oil, gear oil, rear axle oil, power steering fluid, brake fluid, axle grease, washing solvent, gasoline, diesel, biodiesel, isopropyl alcohol, antifreeze ethylene glycol cleaning agent, battery acid, fuel additives, kerosene, dust control (magnesium chloride), humidity control (calcium chloride), hydrochloric acid, fertilizer -28% nitrogen, herbicide, fungicide, ether, bleach solutions, primer, BASF G40 antifreeze, Shell universal cleaner

1) At the respective natural frequency in the range of ±30 Hz, the specified excitation is lower.

Technical data EMP1-13

General electrical properties

Parameter	Unit	EMP1-13		
		20	30	40
Nominal rotational speed	rpm	2000	3000	4000
Maximum rotational speed	rpm	10500		
Nominal voltage range	VDC	400 ... 750		
Operating DC voltage	VDC	270 ... 850		
Voltage range		HV_3 according to LV123		
Switching frequency	kHz	≥ 4		
Electrical connection		Star connection		

General mechanical properties

Parameter		Unit	EMP1-13				
			D	F	H	J	l
Weight	Internal splined shaft	kg	See chapter "Dimensions"				
	External spline shaft	kg	See chapter "Dimensions"				
Overall length		mm	348	398	448	498	548
Moment of inertia	Internal splined shaft	kgm^2	0.0449	0.0424	0.0541	0.0658	0.0775
	External spline shaft	kgm^2	0.0449	0.0424	0.0542	0.0659	0.0776
Center of gravity	Internal splined shaft	mm	X = 148.6 Y = 14 Z = −0.15	X = 174 Y = 12.4 Z = −0.1	X = 199.4 Y = 10.8 Z = −0.16	X = 224.8 Y = 9.7 Z = −0.15	X = 249 Y = 8.6 Z = −0.1
	External spline shaft	mm	X = 150 Y = 14.3 Z = −0.16	X = 175 Y = 12.5 Z = −0.2	X = 200 Y = 10.9 Z = −0.1	X = 225.9 Y = 9.7 Z = −0.15	X = 250 Y = 8.7 Z = −0.1

Mechanical interface

Parameter	
Motor mounting	
Motor flange (according to SAE J617)	SAE 5
External spline shaft (type code W2) for motor (according to DIN 5480)	W 40 × 2 × 18 × 9d
Pump mounting	
Pump flange (according to SAE J744)	C2, 45° steps C4, 45° steps
Internal splined shaft (type code N2) for pumps (according to ANSI B92.1)	N1 1/4 14T 12/24 DP
Gearbox mounting	
Gearbox flange (according to SAE J617)	Based on SAE 5
Internal splined shaft (type code N2) for gearboxes (according to ANSI B92.1)	N1 1/4 14T 12/24 DP

Cooling

The table shows the operating conditions for the cooling liquid. Further information on motor cooling can be found in "operating instructions 96709-01-B."

Parameter			Symbol	Unit	Value
Standard cooling liquid					Water:glycol 50:50 – Glysantin G40
Nominal flow rate			Q_{min}	l/min	20
Maximum inlet pressure			p_{max}	bar	6
Inlet temperature			T_{Inlet}	°C	Minimum −37 °C Maximum 65 °C
Cooling liquid volume	Length	D	V_{liquid}	l	1.2
		F	V_{liquid}	l	1.4
		H	V_{liquid}	l	1.6
		J	V_{liquid}	l	1.8
		L	V_{liquid}	l	2.0
Coolant channels material					Aluminum, cast iron
Coolant connection					2 × G1/2" according to ISO 1179-1
Heat class according to IEC 60034-1					H

Pressure drop

The following graphs show the pressure drop at a 50:50 water to glycol ratio depending on the flow rate and the temperature of the cooling liquid

▼ **EMP1-13F**

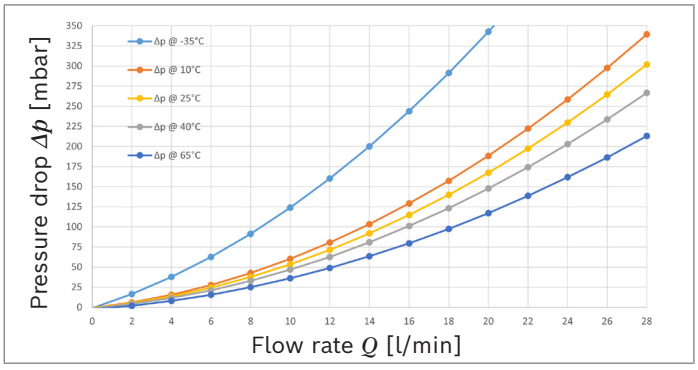

▼ **EMP1-13J**

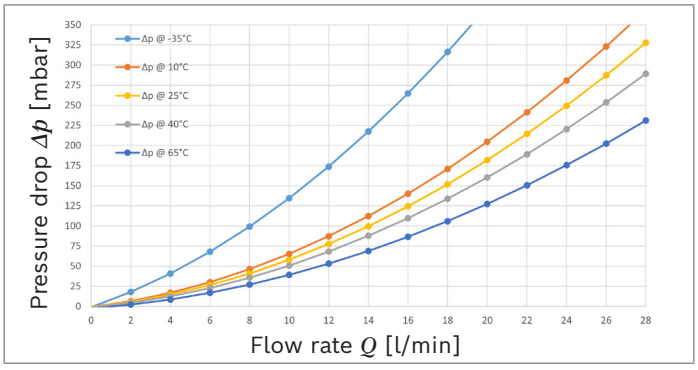

▼ **EMP1-13H**

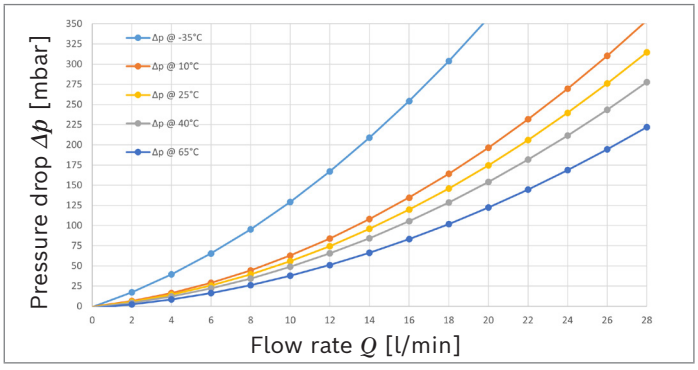

▼ **EMP1-13L**

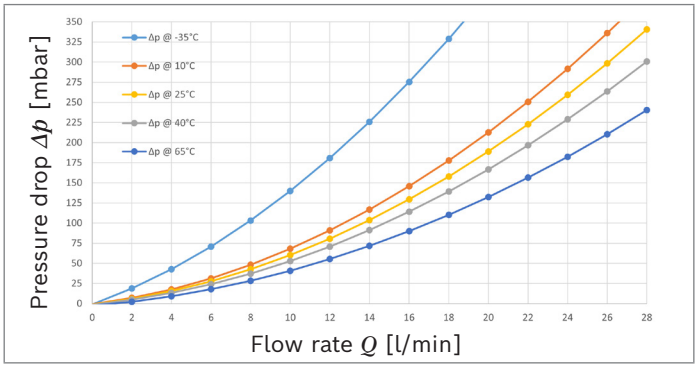

Power data EMP1-13

EMP1-13D20

Designation	Symbol	Unit	Value
S1 continuous torque at 200 rpm	$M_{S1,\ low\ rotational\ speed}$	Nm	133
S1 continuous current at 200 rpm	$I_{S1,\ low\ rotational\ speed}$	A_{RMS}	44
Nominal rotational speed	n_{nom}	rpm	2000
S1 continuous torque at n_{nom}	$M_{S1,\ nnom}$	Nm	128
S1 continuous current at n_{nom}	$I_{S1,\ nnom}$	A_{RMS}	44
S1 continuous power at n_{nom}	$P_{S1,\ nnom}$	kW	27
S1 continuous efficiency at n_{nom}	$\eta_{S1,\ nnom}$	%	91.48
S2 for 60s torque (maximum torque)[1]	$M_{S2,\ 60\ s}$	Nm	336
S2 for 60s current (maximum current)[1]	$I_{S2,\ 60\ s}$	A_{RMS}	174
S2 for 60s power (maximum power)[1]	$P_{S2,\ 60\ s}$	kW	45
Maximum rotational speed	n_{max}	rpm	10500
S1 continuous torque at n_{max}	$M_{S1,\ nmax}$	Nm	14
S1 continuous current at n_{max}	$I_{S1,\ nmax}$	A_{RMS}	34
S1 continuous power at n_{max}	$P_{S1,\ max}$	kW	15
S1 continuous efficiency at n_{max}	$\eta_{S1,\ nmax}$	%	83.84
S1 continuous torque at $P_{S1,\ max}$	$M_{S1,\ Pmax}$	Nm	71
S1 continuous current at $P_{S1,\ max}$	$I_{S1,\ Pmax}$	A_{RMS}	43
S1 continuous power at $P_{S1,\ max}$	$P_{S1,\ Pmax}$	kW	32
S1 continuous speed at $P_{S1,\ max}$	$n_{S1,\ Pmax}$	rpm	4305
S1 continuous efficiency at $P_{S1,\ max}$	$\eta_{S1,\ Pmax}$	%	92.38
Short circuit braking torque at nominal rotational speed[2]	$M_{nom,\ sc}$	Nm	10
Short circuit current at nominal speed[2]	$I_{nom,\ sc}$	A_{RMS}	53
Maximum short circuit braking torque[2]	$M_{max,\ sc}$	Nm	84
Maximum short circuit current[2]	$I_{max,\ sc}$	A_{RMS}	53
DC supply voltage	V_{DC}	V	700
Voltage for motor phases (outer conductor-outer conductor – RMS)	V_{LL}	V_{RMS}	475

Electric	Symbol	Unit	Value
Number of poles			8
Phase-phase voltage constant at 20 °C	k_{EMK}	V_{RMS} / 1000 rpm	169,09
Torque constant at 25 °C	k_T	Nm / A_{RMS}	3.21
Synchronous inductance (d-axis) at rated current	L_d	mH	3.84
Synchronous inductance (q-axis) at rated current	L_q	mH	6.85
Stator winding resistance (phase) at 20 °C	R_{LL}	Ω	0.4936
Cogging torque (unskewed)	M_{cog}	Nm	7.08
Torque ripple	$M_{Pk\text{-}Pk}$	Nm	15.03

1) For the S2 calculation, the starting temperature of the components is assumed to be 25 °C.
2) Magnet temperature at 20 °C

▼ **Torque EMP1-13D20**

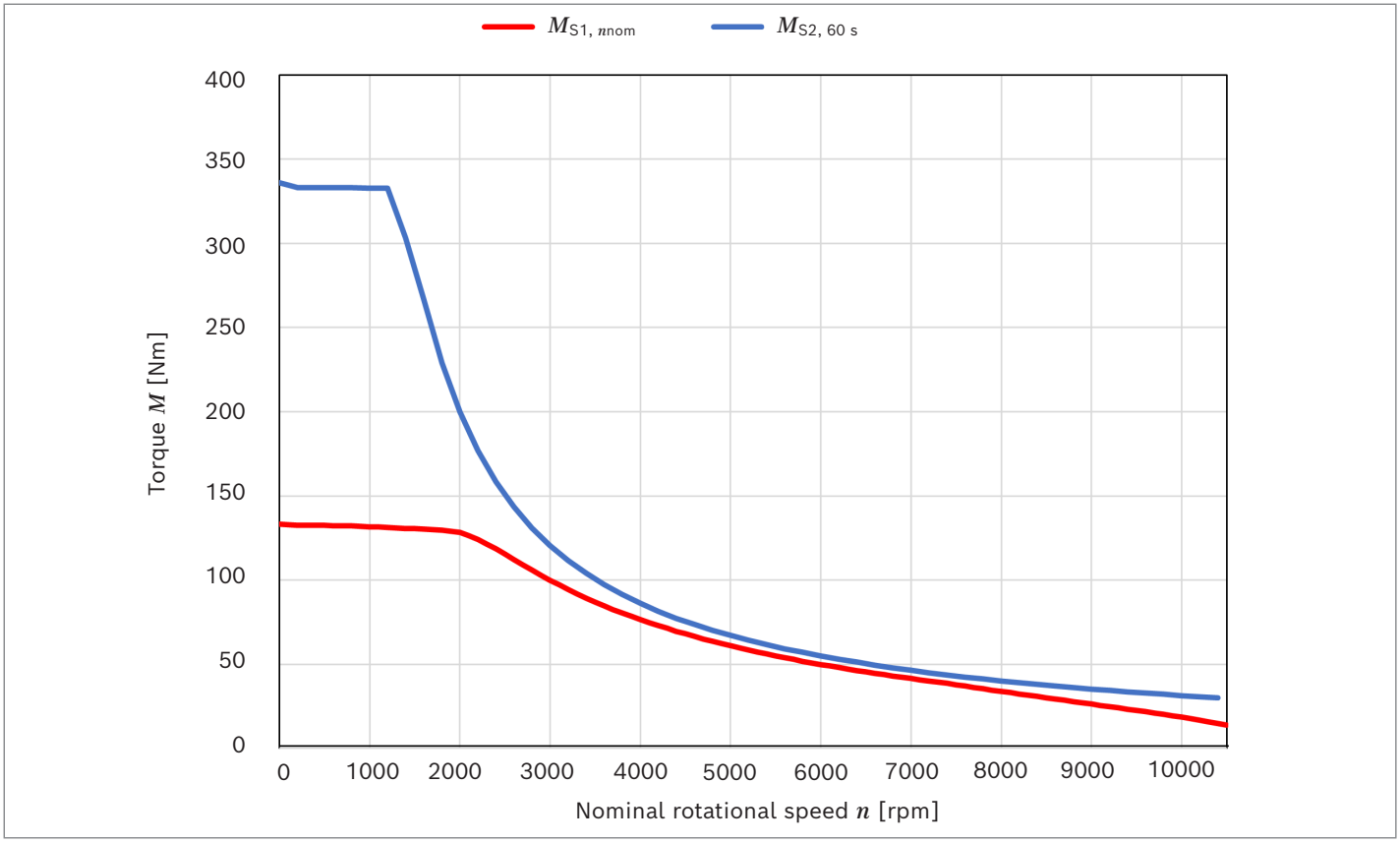

▼ **Power EMP1-13D20**

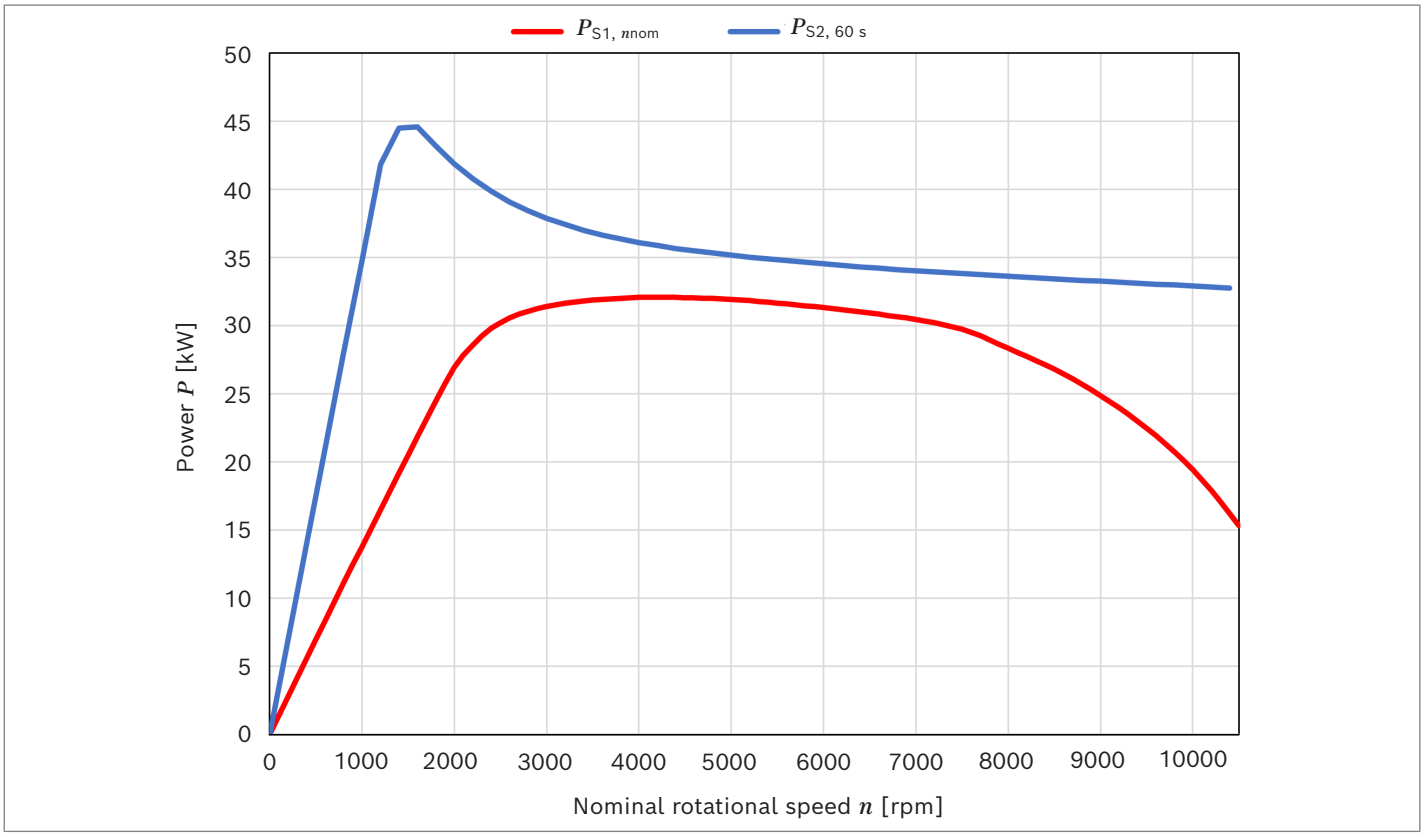

▼ **Short circuit current and short circuit braking torque EMP1-13D20**

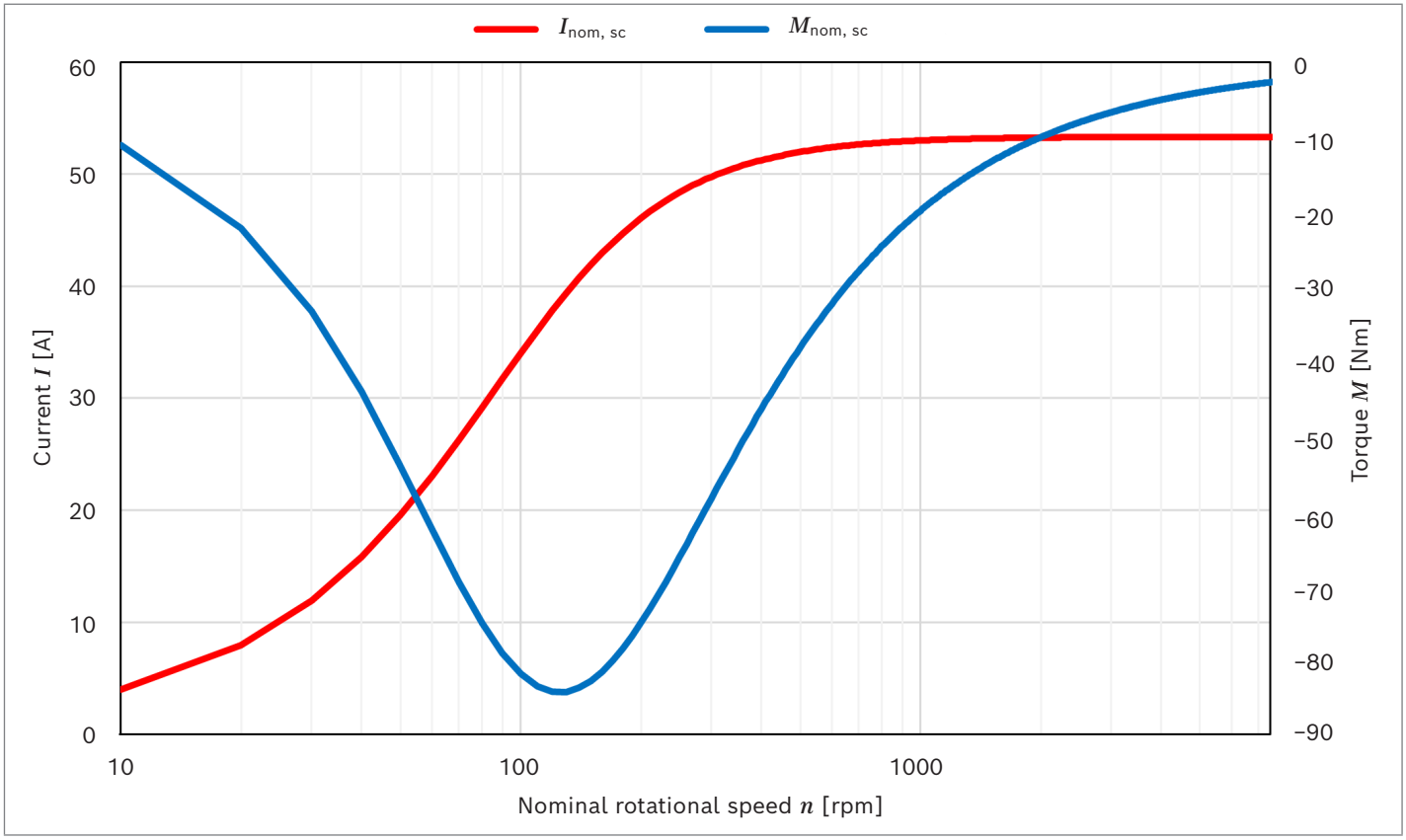

EMP1-13D30

Designation	Symbol	Unit	Value
S1 continuous torque at 200 rpm	$M_{S1,\ low\ rotational\ speed}$	Nm	133
S1 continuous current at 200 rpm	$I_{S1,\ low\ rotational\ speed}$	A_{RMS}	67
Nominal rotational speed	n_{nom}	rpm	3000
S1 continuous torque at n_{nom}	$M_{S1,\ nnom}$	Nm	125
S1 continuous current at n_{nom}	$I_{S1,\ nnom}$	A_{RMS}	64
S1 continuous power at n_{nom}	$P_{S1,\ nnom}$	kW	39
S1 continuous efficiency at n_{nom}	$\eta_{S1,\ nnom}$	%	93.66
S2 for 60s torque (maximum torque)[1]	$M_{S2,\ 60\ s}$	Nm	335
S2 for 60s current (maximum current)[1]	$I_{S2,\ 60\ s}$	A_{RMS}	259
S2 for 60s power (maximum power)[1]	$P_{S2,\ 60\ s}$	kW	69
Maximum rotational speed	n_{max}	rpm	10500
S1 continuous torque at n_{max}	$M_{S1,\ nmax}$	Nm	28
S1 continuous current at n_{max}	$I_{S1,\ nmax}$	A_{RMS}	47
S1 continuous power at n_{max}	$P_{S1,\ max}$	kW	31
S1 continuous efficiency at n_{max}	$\eta_{S1,\ nmax}$	%	91.36
S1 continuous torque at $P_{S1,\ max}$	$M_{S1,\ Pmax}$	Nm	85
S1 continuous current at $P_{S1,\ max}$	$I_{S1,\ Pmax}$	A_{RMS}	62
S1 continuous power at $P_{S1,\ max}$	$P_{S1,\ Pmax}$	kW	46
S1 continuous speed at $P_{S1,\ max}$	$n_{S1,\ Pmax}$	%	5145
S1 continuous efficiency at $P_{S1,\ max}$	$\eta_{S1,\ Pmax}$	%	94.30
Short circuit braking torque at nominal rotational speed[2]	$M_{nom,\ sc}$	Nm	7
Short circuit current at nominal speed[2]	$I_{nom,\ sc}$	A_{RMS}	80
Maximum short circuit braking torque[2]	$M_{max,\ sc}$	Nm	84
Maximum short circuit current[2]	$I_{max,\ sc}$	A_{RMS}	80
DC supply voltage	V_{DC}	V	700
Voltage for motor phases (outer conductor-outer conductor – RMS)	V_{LL}	V_{RMS}	475

Electric	Symbol	Unit	Value
Number of poles			8
Phase-phase voltage constant at 20 °C	k_{EMK}	V_{RMS} / 1000 rpm	112.72
Torque constant at 25 °C	k_T	Nm / A_{RMS}	2.14
Synchronous inductance (d-axis) at rated current	L_d	mH	1.66
Synchronous inductance (q-axis) at rated current	L_q	mH	3
Stator winding resistance (phase) at 20 °C	R_{LL}	Ω	0.2194
Cogging torque (unskewed)	M_{cog}	Nm	7.08
Torque ripple	$M_{Pk\text{-}Pk}$	Nm	14.89

1) For the S2 calculation, the starting temperature of the components is assumed to be 25 °C.
2) Magnet temperature at 20 °C

▼ **Torque EMP1-13D30**

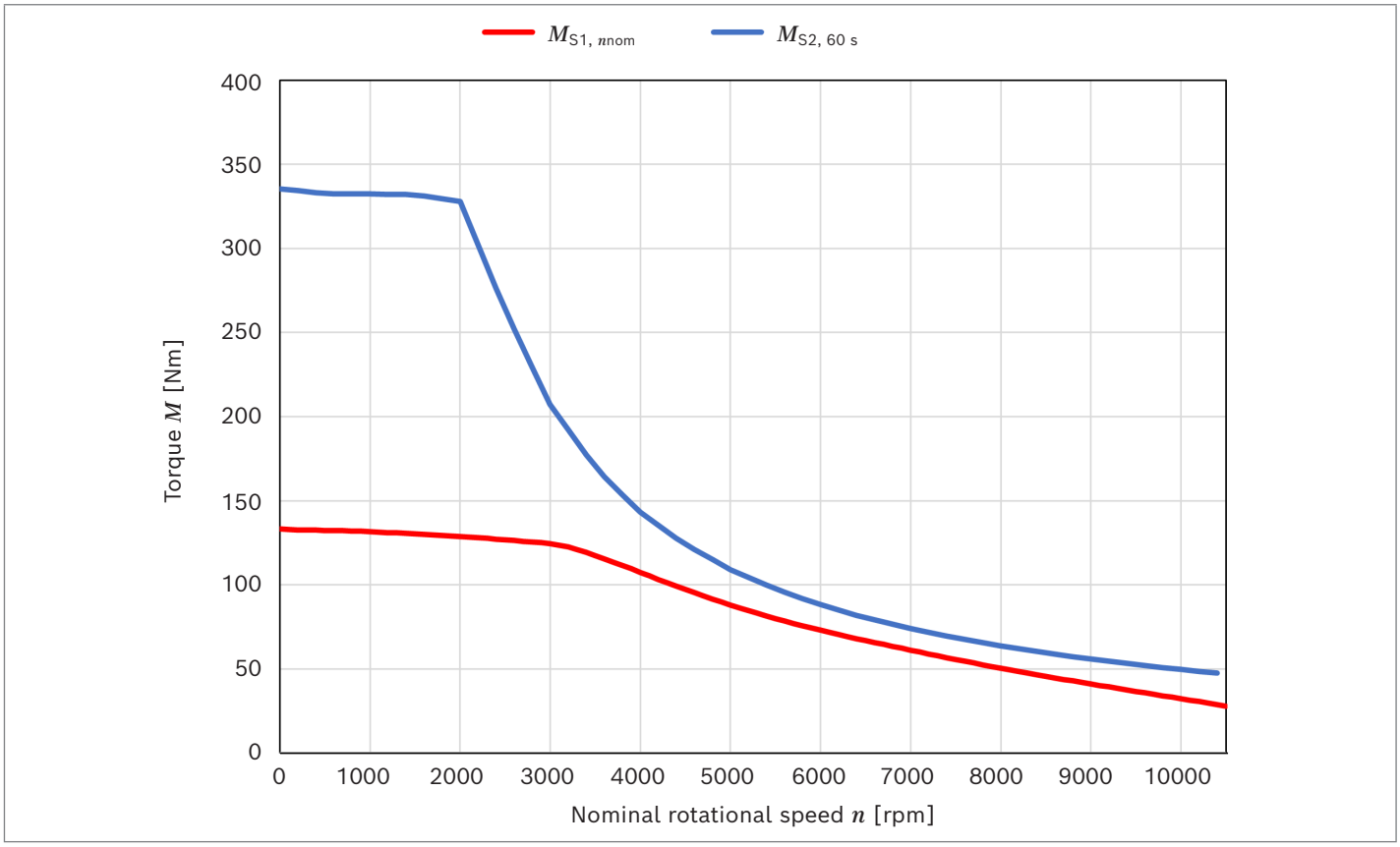

▼ **Power EMP1-13D30**

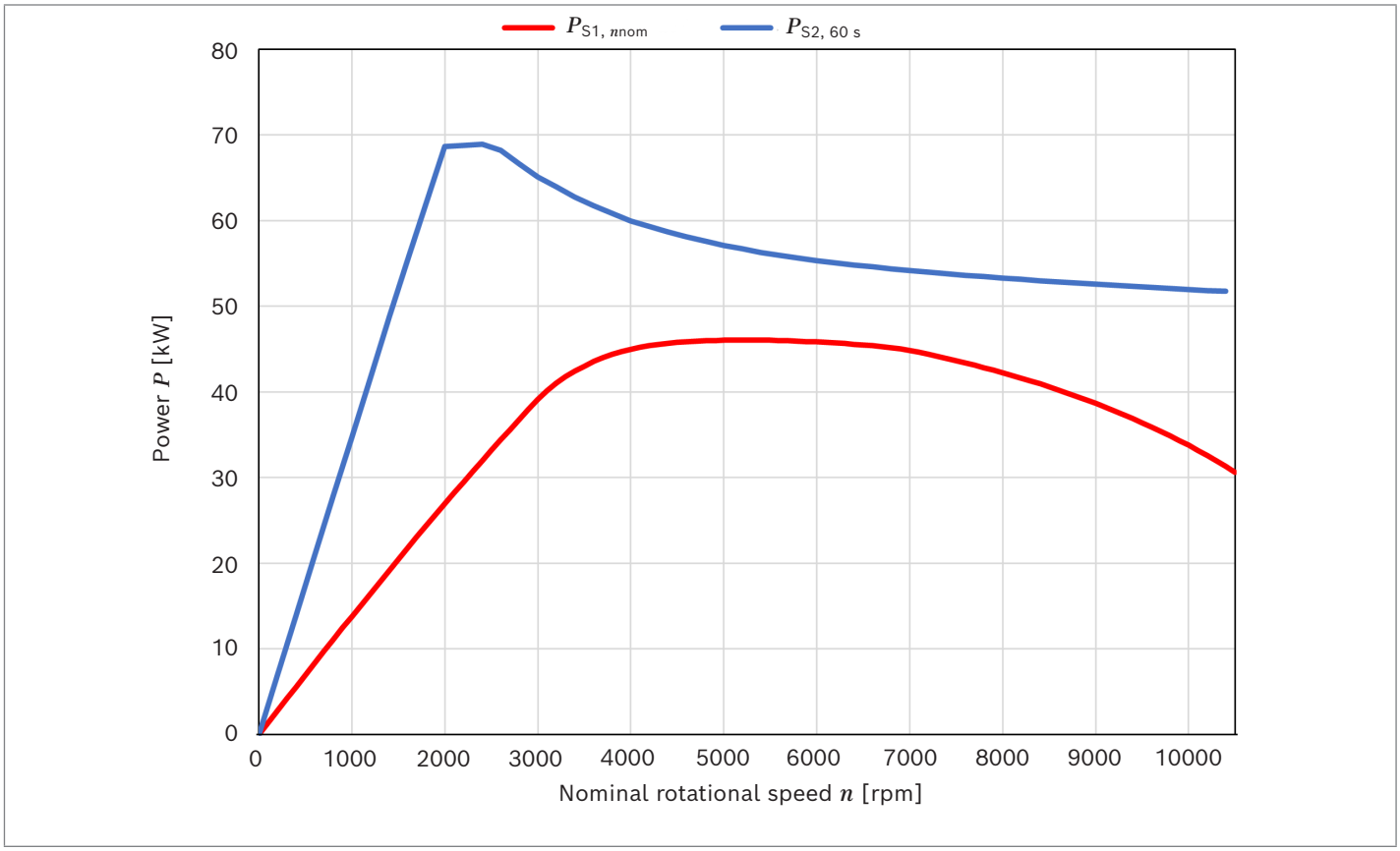

▼ **Short circuit current and short circuit braking torque EMP1-13D30**

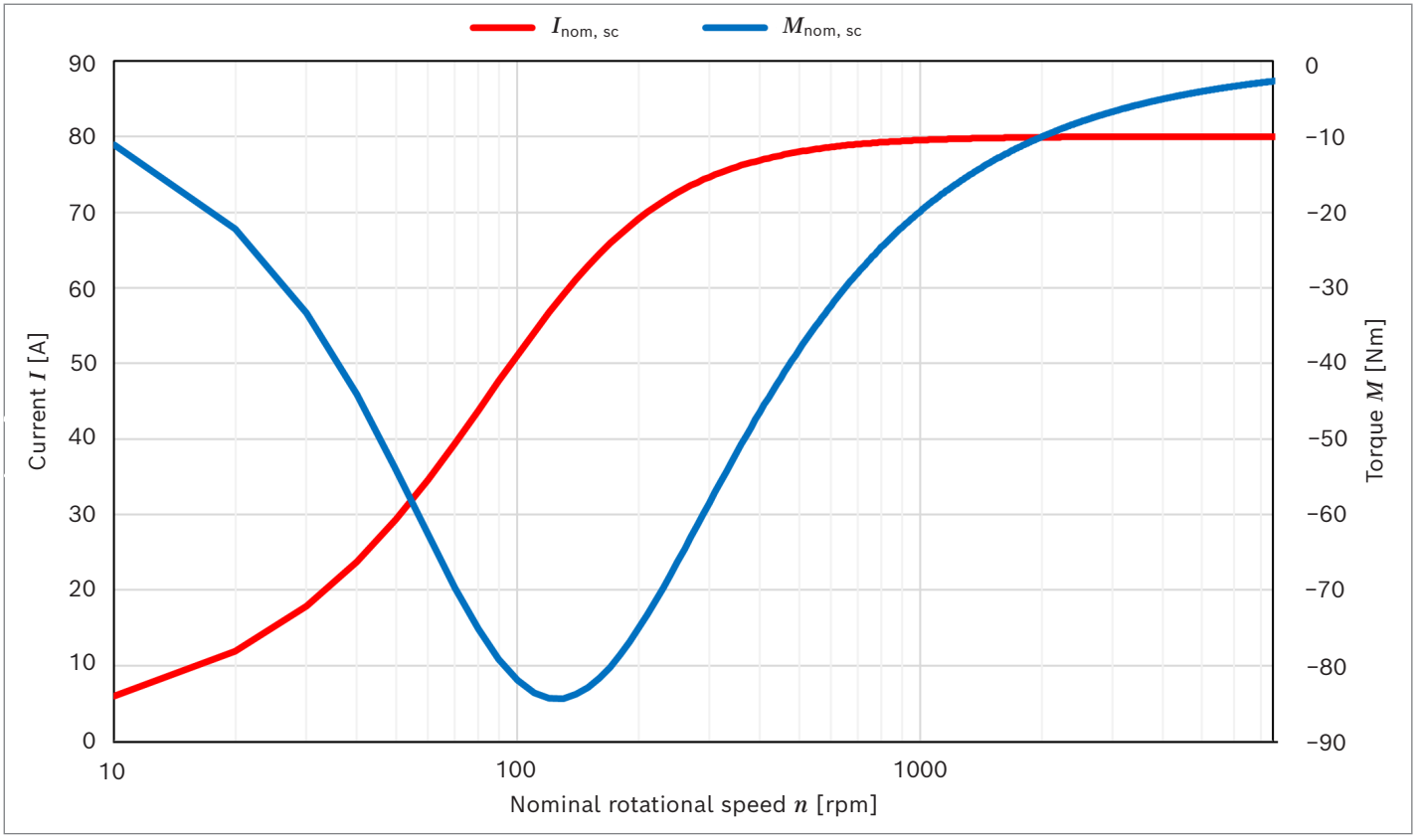

EMP1-13D40

Designation	Symbol	Unit	Value
S1 continuous torque at 200 rpm	$M_{S1,\ low\ rotational\ speed}$	Nm	133
S1 continuous current at 200 rpm	$I_{S1,\ low\ rotational\ speed}$	A_{RMS}	89
Nominal rotational speed	n_{nom}	rpm	4000
S1 continuous torque at n_{nom}	$M_{S1,\ nnom}$	Nm	120
S1 continuous current at n_{nom}	$I_{S1,\ nnom}$	A_{RMS}	84
S1 continuous power at n_{nom}	$P_{S1,\ nnom}$	kW	50
S1 continuous efficiency at n_{nom}	$\eta_{S1,\ nnom}$	%	94.74
S2 for 60s torque (maximum torque)[1]	$M_{S2,\ 60\ s}$	Nm	336
S2 for 60s current (maximum current)[1]	$I_{S2,\ 60\ s}$	A_{RMS}	347
S2 for 60s power (maximum power)[1]	$P_{S2,\ 60\ s}$	kW	94
Maximum rotational speed	n_{max}	rpm	10500
S1 continuous torque at n_{max}	$M_{S1,\ nmax}$	Nm	44
S1 continuous current at n_{max}	$I_{S1,\ nmax}$	A_{RMS}	64
S1 continuous power at n_{max}	$P_{S1,\ max}$	kW	48
S1 continuous efficiency at n_{max}	$\eta_{S1,\ nmax}$	%	94.34
S1 continuous torque at $P_{S1,\ max}$	$M_{S1,\ Pmax}$	Nm	89
S1 continuous current at $P_{S1,\ max}$	$I_{S1,\ Pmax}$	A_{RMS}	79
S1 continuous power at $P_{S1,\ max}$	$P_{S1,\ Pmax}$	kW	60
S1 continuous speed at $P_{S1,\ max}$	$n_{S1,\ Pmax}$	%	6405
S1 continuous efficiency at $P_{S1,\ max}$	$\eta_{S1,\ Pmax}$	%	95.41
Short circuit braking torque at nominal rotational speed[2]	$M_{nom,\ sc}$	Nm	5
Short circuit current at nominal speed[2]	$I_{nom,\ sc}$	A_{RMS}	107
Maximum short circuit braking torque[2]	$M_{max,\ sc}$	Nm	84
Maximum short circuit current[2]	$I_{max,\ sc}$	A_{RMS}	107
DC supply voltage	V_{DC}	V	700
Voltage for motor phases (outer conductor-outer conductor – RMS)	V_{LL}	V_{RMS}	475

Electric	Symbol	Unit	Value
Number of poles			8
Phase-phase voltage constant at 20 °C	k_{EMK}	V_{RMS} / 1000 rpm	85
Torque constant at 25 °C	k_T	Nm / A_{RMS}	1.54
Synchronous inductance (d-axis) at rated current	L_d	mH	0.92
Synchronous inductance (q-axis) at rated current	L_q	mH	2.32
Stator winding resistance (phase) at 20 °C	R_{LL}	Ω	0.12
Cogging torque (unskewed)	M_{cog}	Nm	7.08
Torque ripple	$M_{Pk\text{-}Pk}$	Nm	14.76

1) For the S2 calculation, the starting temperature of the components is assumed to be 25 °C.
2) Magnet temperature at 20 °C

▼ **Torque EMP1-13D40**

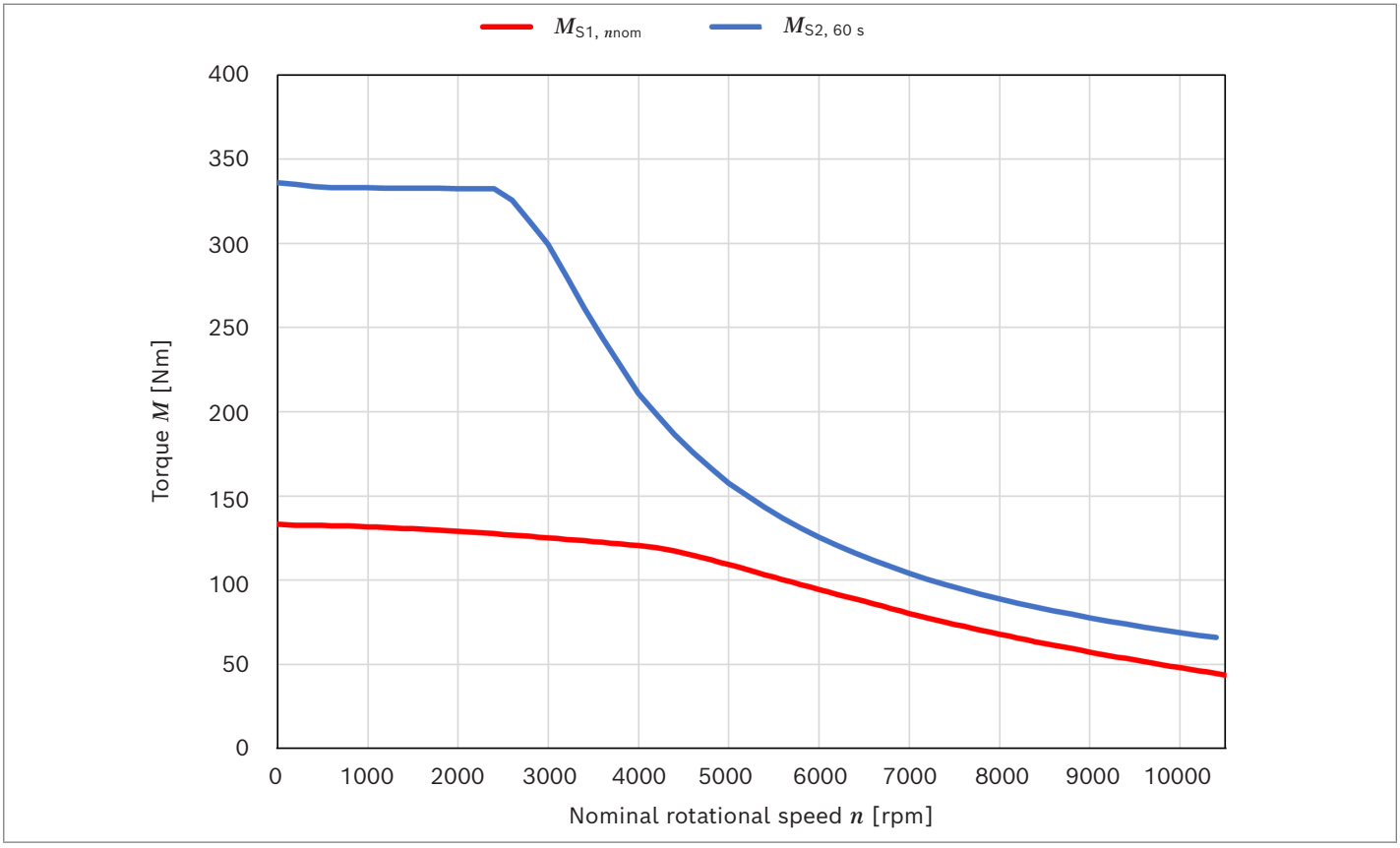

▼ **Power EMP1-13D40**

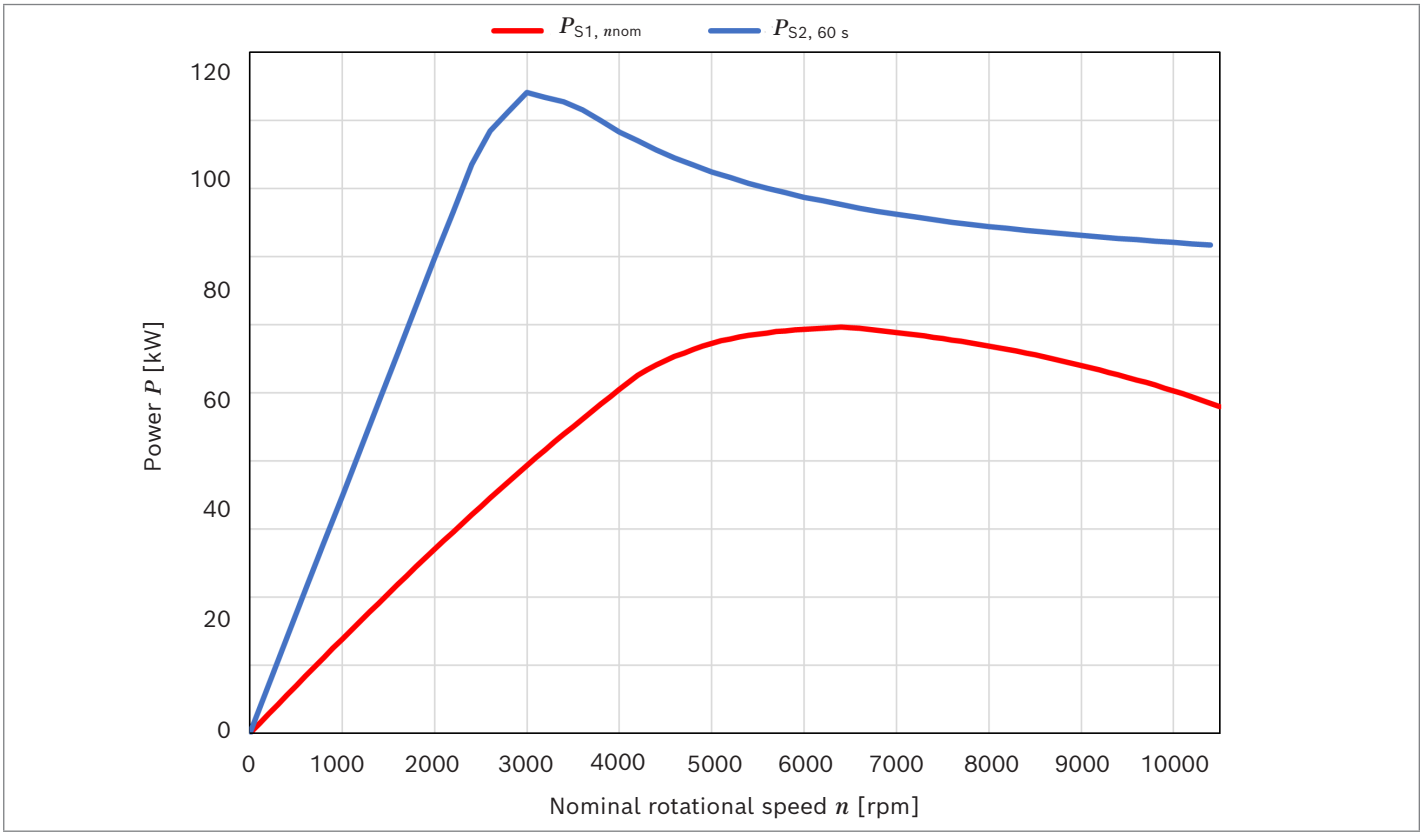

▼ **Short circuit current and short circuit braking torque EMP1-13D40**

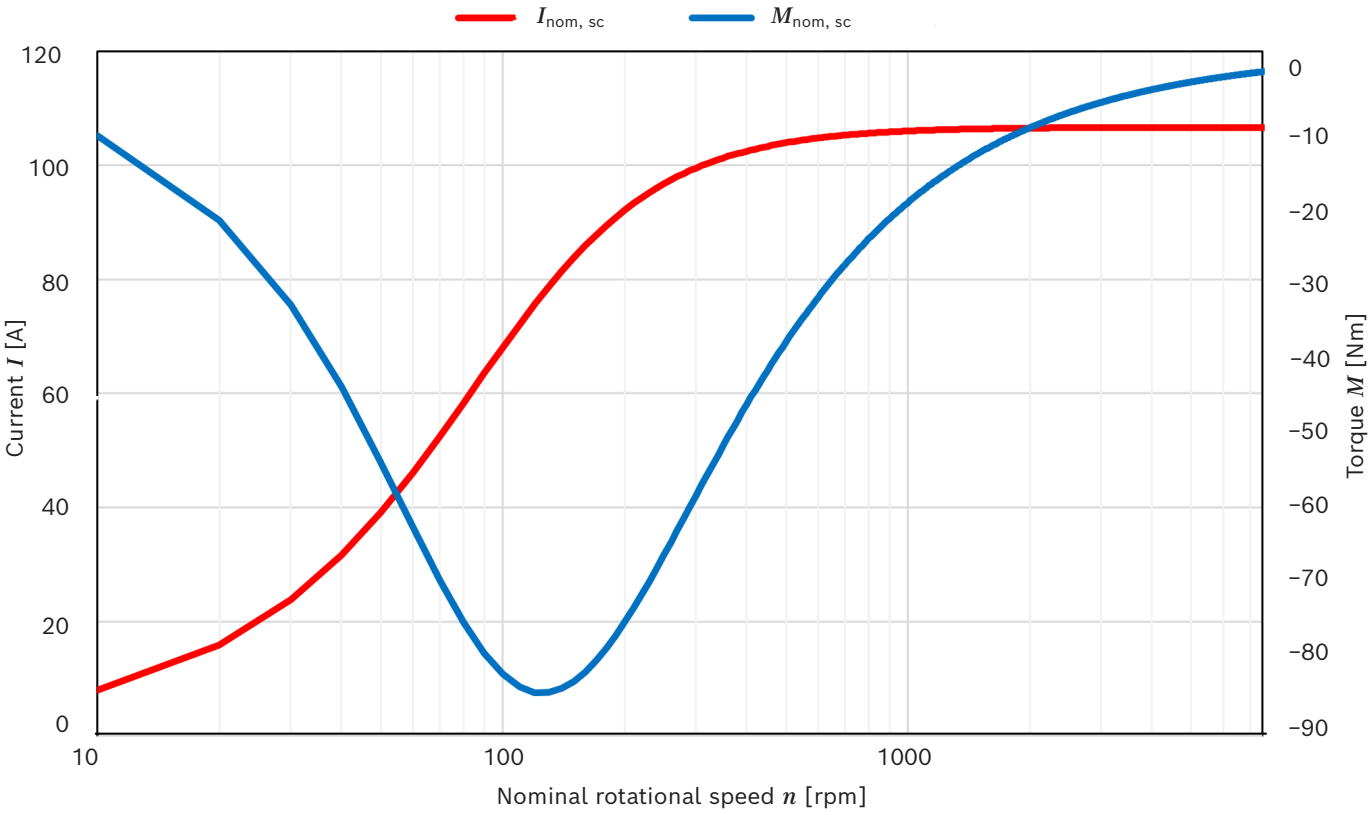

EMP1-13F20

Designation	Symbol	Unit	Value
S1 continuous torque at 200 rpm	$M_{S1,\ low\ rotational\ speed}$	Nm	207
S1 continuous current at 200 rpm	$I_{S1,\ low\ rotational\ speed}$	A_{RMS}	69
Nominal rotational speed	n_{nom}	rpm	2000
S1 continuous torque at n_{nom}	$M_{S1,\ nnom}$	Nm	199
S1 continuous current at n_{nom}	$I_{S1,\ nnom}$	A_{RMS}	68
S1 continuous power at n_{nom}	$P_{S1,\ nnom}$	kW	42
S1 continuous efficiency at n_{nom}	$\eta_{S1,\ nnom}$	%	92.55
S2 for 60s torque (maximum torque)[1]	$M_{S2,\ 60\ s}$	Nm	503
S2 for 60s current (maximum current)[1]	$I_{S2,\ 60\ s}$	A_{RMS}	259
S2 for 60s power (maximum power)[1]	$P_{S2,\ 60\ s}$	kW	70
Maximum rotational speed	n_{max}	rpm	10500
S1 continuous torque at n_{max}	$M_{S1,\ nmax}$	Nm	4
S1 continuous current at n_{max}	$I_{S1,\ nmax}$	A_{RMS}	46
S1 continuous power at n_{max}	$P_{S1,\ max}$	kW	4
S1 continuous efficiency at n_{max}	$\eta_{S1,\ nmax}$	%	20.54
S1 continuous torque at $P_{S1,\ max}$	$M_{S1,\ Pmax}$	Nm	121
S1 continuous current at $P_{S1,\ max}$	$I_{S1,\ Pmax}$	A_{RMS}	66
S1 continuous power at $P_{S1,\ max}$	$P_{S1,\ Pmax}$	kW	49
S1 continuous speed at $P_{S1,\ max}$	$n_{S1,\ Pmax}$	%	3885
S1 continuous efficiency at $P_{S1,\ max}$	$\eta_{S1,\ Pmax}$	%	93.32
Short circuit braking torque at nominal rotational speed[2]	$M_{nom,\ sc}$	Nm	13
Short circuit current at nominal speed[2]	$I_{nom,\ sc}$	A_{RMS}	81
Maximum short circuit braking torque[2]	$M_{max,\ sc}$	Nm	129
Maximum short circuit current[2]	$I_{max,\ sc}$	A_{RMS}	81
DC supply voltage	V_{DC}	V	700
Voltage for motor phases (outer conductor-outer conductor – RMS)	V_{LL}	V_{RMS}	475

Electric	Symbol	Unit	Value
Number of poles			8
Phase-phase voltage constant at 20 °C	k_{EMK}	V_{RMS} / 1000 rpm	169.09
Torque constant at 25 °C	k_T	Nm / A_{RMS}	3.21
Synchronous inductance (d-axis) at rated current	L_d	mH	2.45
Synchronous inductance (q-axis) at rated current	L_q	mH	4.45
Stator winding resistance (phase) at 20 °C	R_{LL}	Ω	0.2714
Cogging torque (unskewed)	M_{cog}	Nm	10.61
Torque ripple	$M_{Pk\text{-}Pk}$	Nm	22.83

1) For the S2 calculation, the starting temperature of the components is assumed to be 25 °C.
2) Magnet temperature at 20 °C

▼ **Torque EMP1-13F20**

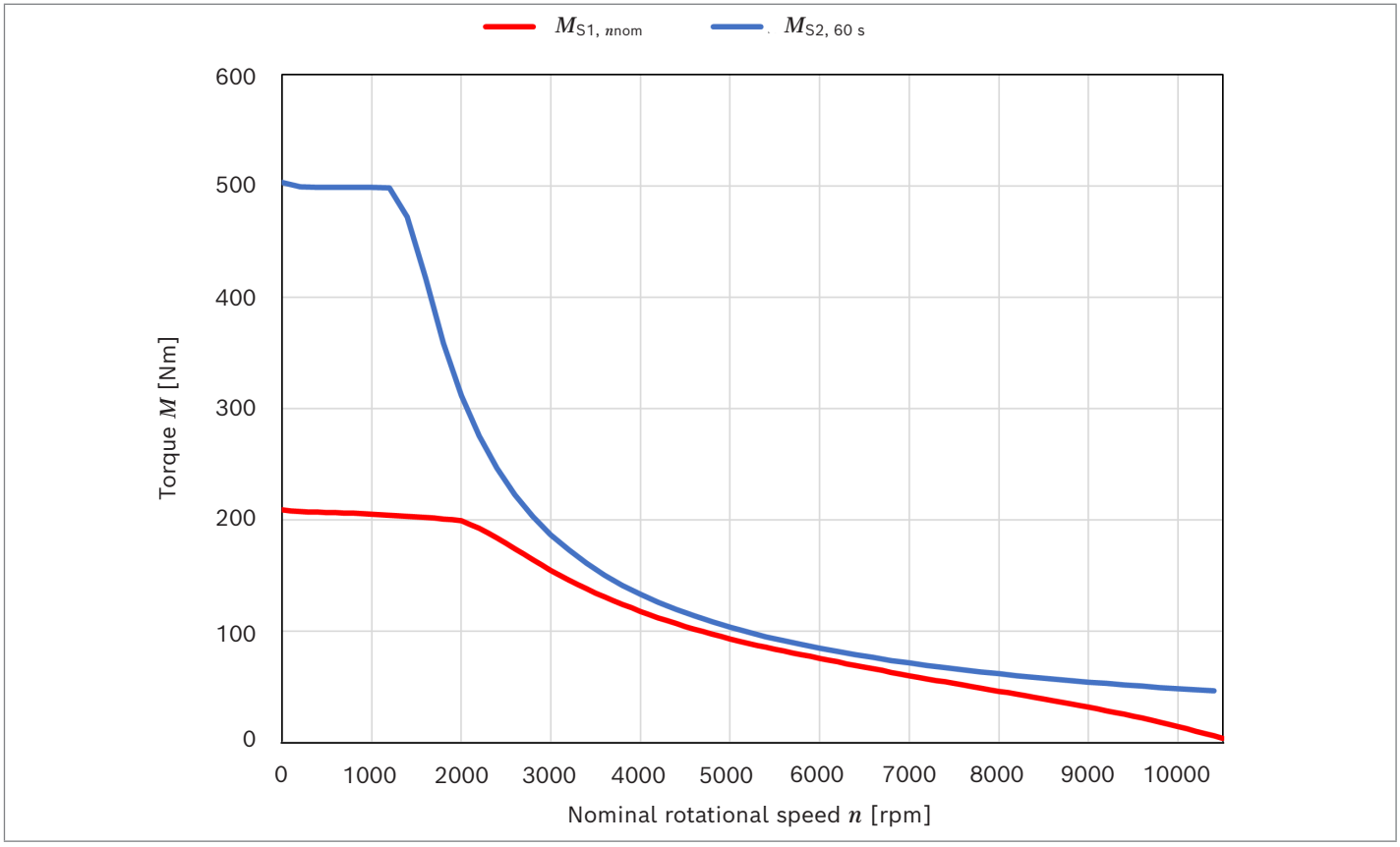

▼ **Power EMP1-13F20**

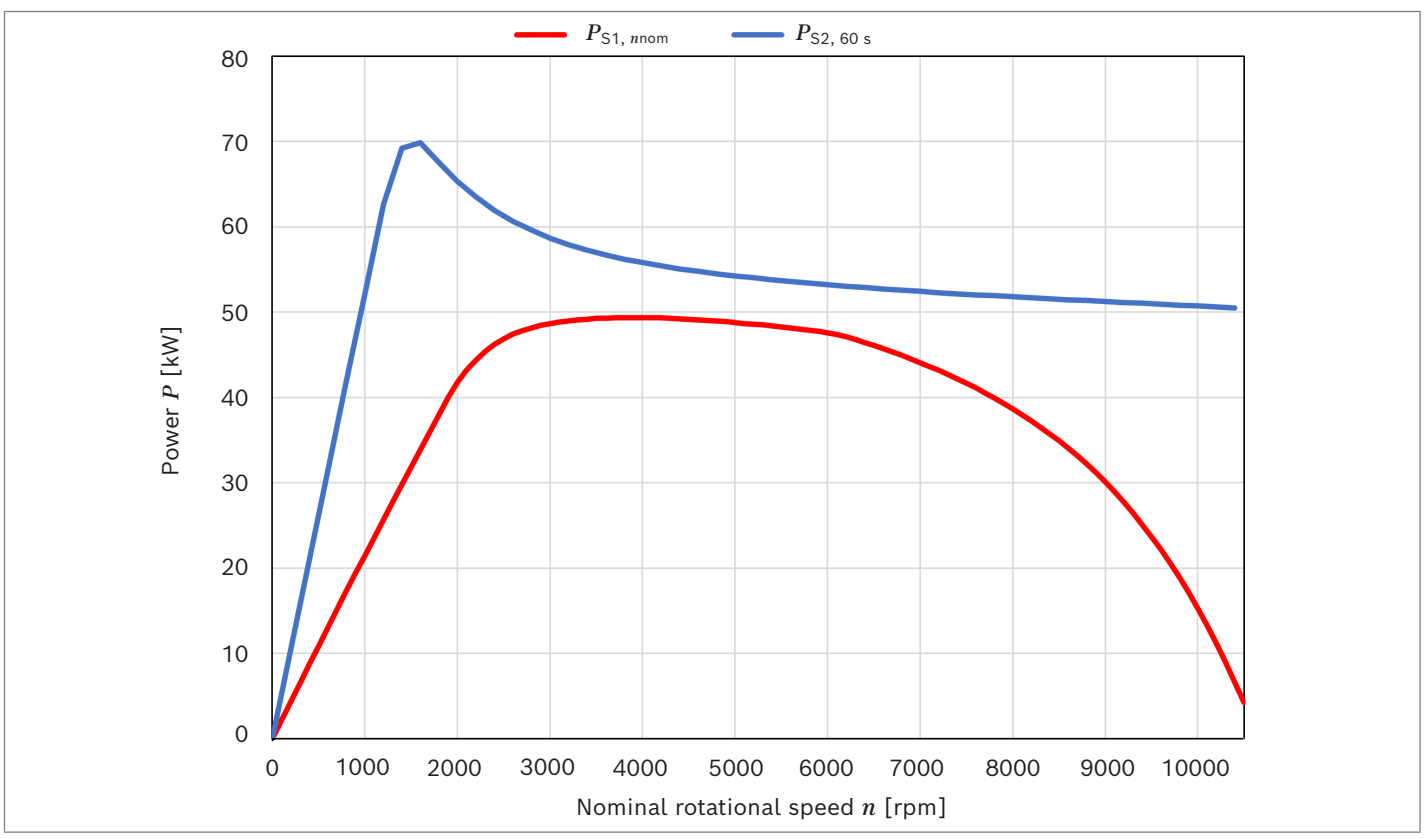

▼ **Short circuit current and short circuit braking torque EMP1-13F20**

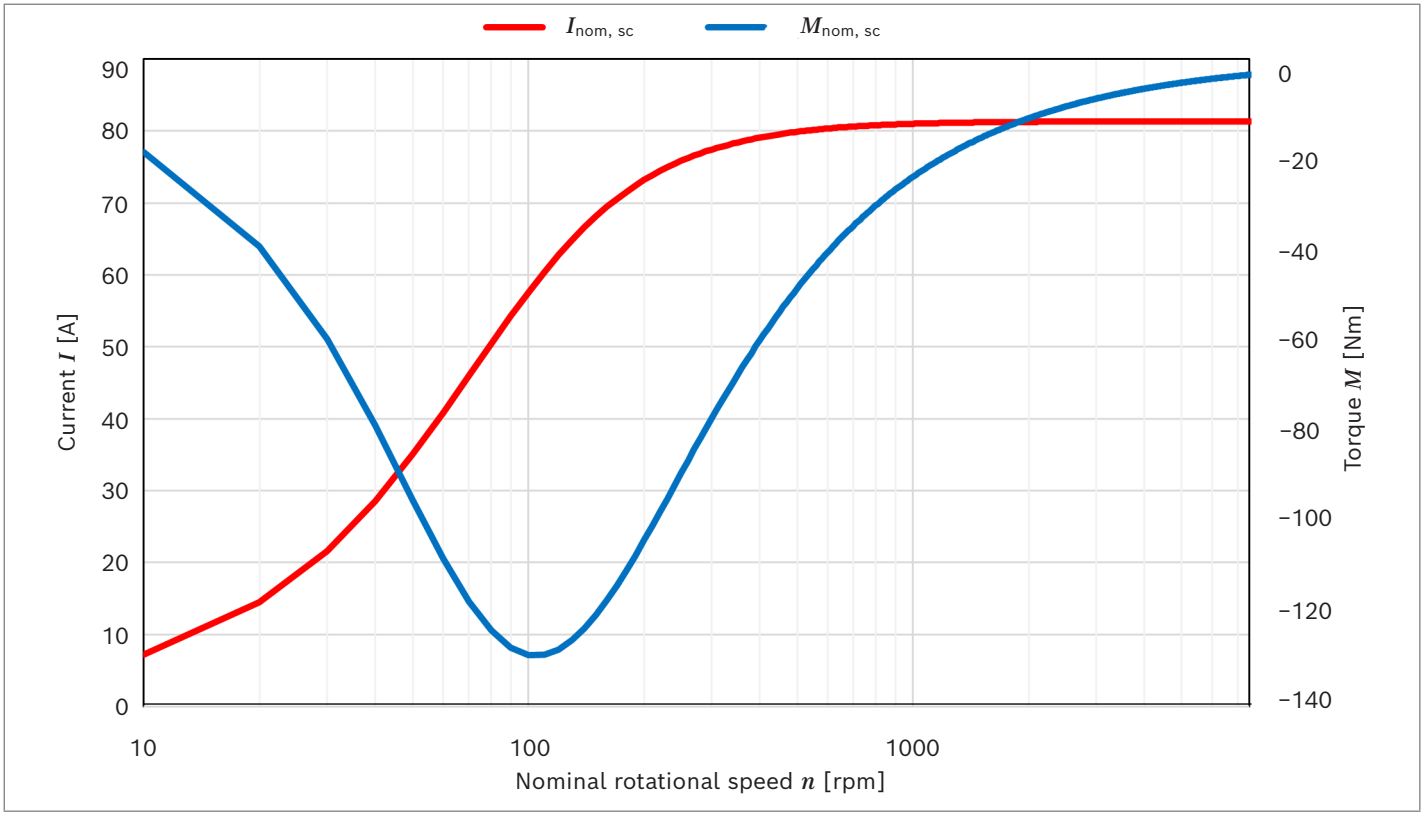

EMP1-13F30

Designation	Symbol	Unit	Value
S1 continuous torque at 200 rpm	$M_{S1,\ low\ rotational\ speed}$	Nm	206
S1 continuous current at 200 rpm	$I_{S1,\ low\ rotational\ speed}$	A_{RMS}	98
Nominal rotational speed	n_{nom}	rpm	3000
S1 continuous torque at n_{nom}	$M_{S1,\ nnom}$	Nm	188
S1 continuous current at n_{nom}	$I_{S1,\ nnom}$	A_{RMS}	93
S1 continuous power at n_{nom}	$P_{S1,\ nnom}$	kW	59
S1 continuous efficiency at n_{nom}	$\eta_{S1,\ nnom}$	%	94.40
S2 for 60s torque (maximum torque)[1]	$M_{S2,\ 60\ s}$	Nm	504
S2 for 60s current (maximum current)[1]	$I_{S2,\ 60\ s}$	A_{RMS}	371
S2 for 60s power (maximum power)[1]	$P_{S2,\ 60\ s}$	kW	102
Maximum rotational speed	n_{max}	rpm	10500
S1 continuous torque at n_{max}	$M_{S1,\ nmax}$	Nm	25
S1 continuous current at n_{max}	$I_{S1,\ nmax}$	A_{RMS}	61
S1 continuous power at n_{max}	$P_{S1,\ max}$	kW	28
S1 continuous efficiency at n_{max}	$\eta_{S1,\ nmax}$	%	87.73
S1 continuous torque at $P_{S1,\ max}$	$M_{S1,\ Pmax}$	Nm	129
S1 continuous current at $P_{S1,\ max}$	$I_{S1,\ Pmax}$	A_{RMS}	88
S1 continuous power at $P_{S1,\ max}$	$P_{S1,\ Pmax}$	kW	66
S1 continuous speed at $P_{S1,\ max}$	$n_{S1,\ Pmax}$	%	4935
S1 continuous efficiency at $P_{S1,\ max}$	$\eta_{S1,\ Pmax}$	%	94.72
Short circuit braking torque at nominal rotational speed[2]	$M_{nom,\ sc}$	Nm	9
Short circuit current at nominal speed[2]	$I_{nom,\ sc}$	A_{RMS}	116
Maximum short circuit braking torque[2]	$M_{max,\ sc}$	Nm	129
Maximum short circuit current[2]	$I_{max,\ sc}$	A_{RMS}	116
DC supply voltage	V_{DC}	V	700
Voltage for motor phases (outer conductor-outer conductor – RMS)	V_{LL}	V_{RMS}	475

Electric	Symbol	Unit	Value
Number of poles			8
Phase-phase voltage constant at 20 °C	k_{EMK}	V_{RMS} / 1000 rpm	118.4
Torque constant at 25 °C	k_T	Nm / A_{RMS}	2.25
Synchronous inductance (d-axis) at rated current	L_d	mH	1.22
Synchronous inductance (q-axis) at rated current	L_q	mH	3.09
Stator winding resistance (phase) at 20 °C	R_{LL}	Ω	0.1336
Cogging torque (unskewed)	M_{cog}	Nm	10.61
Torque ripple	$M_{Pk\text{-}Pk}$	Nm	22.5

1) For the S2 calculation, the starting temperature of the components is assumed to be 25 °C.
2) Magnet temperature at 20 °C

▼ **Torque EMP1-13F30**

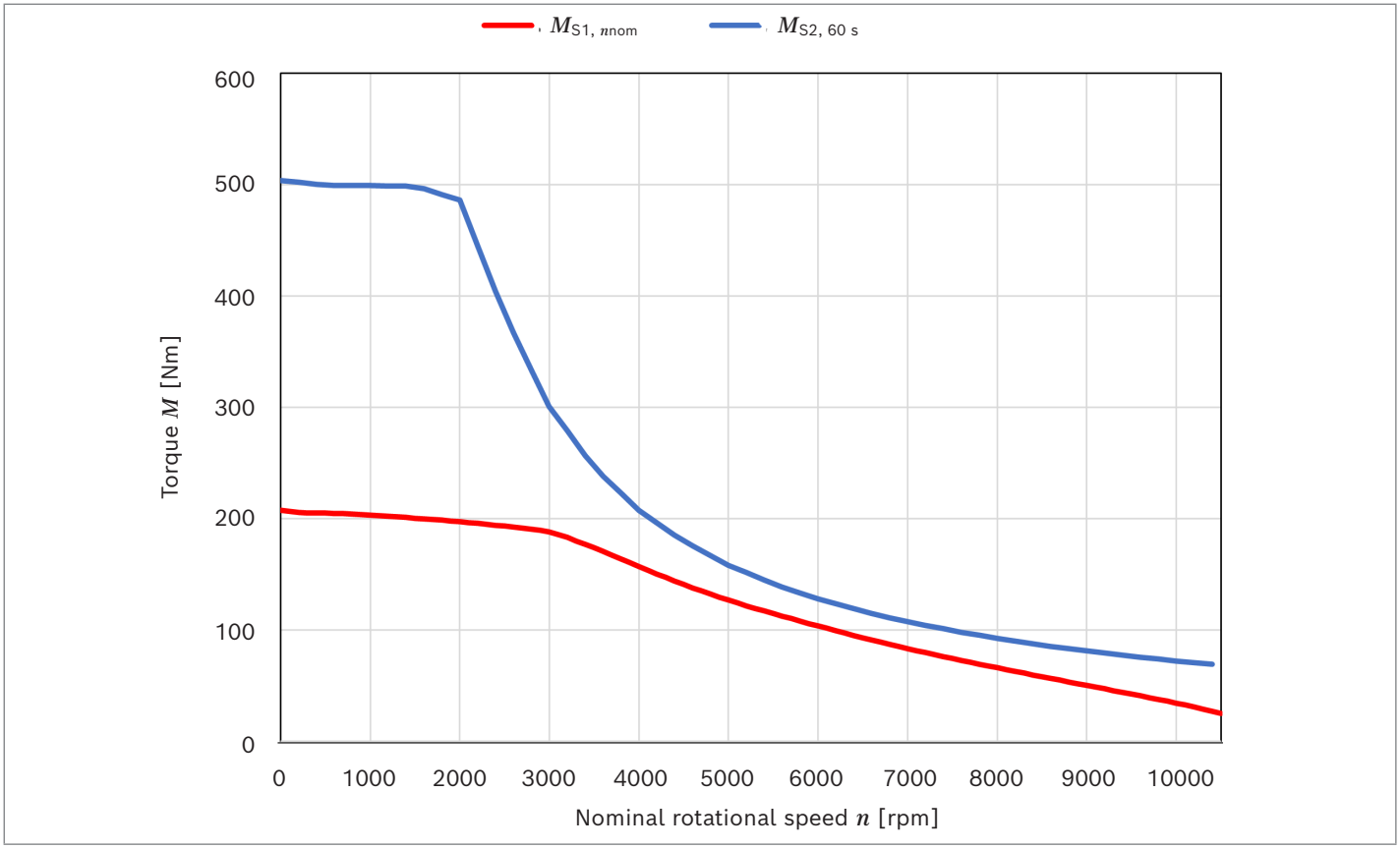

▼ **Power EMP1-13F30**

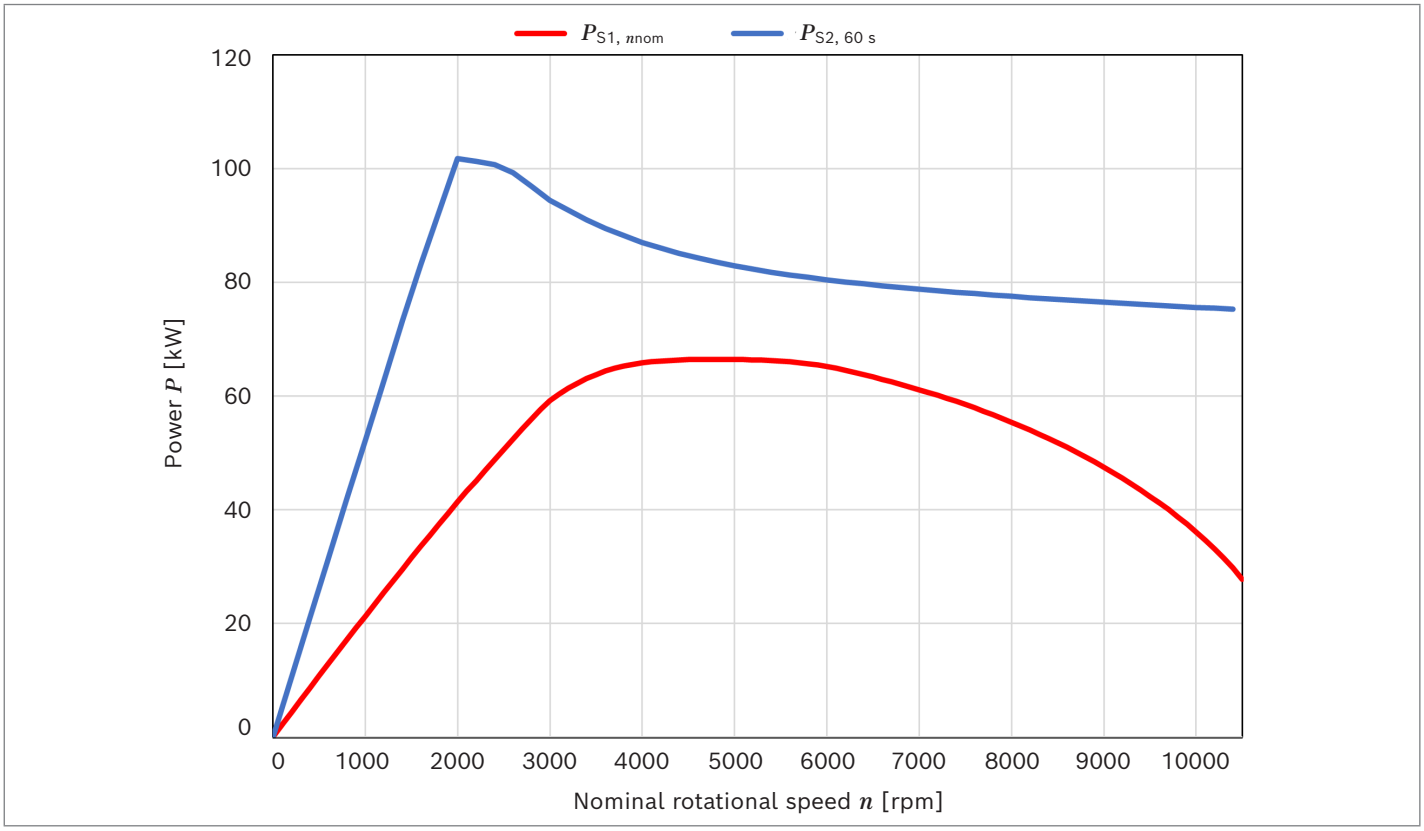

▼ **Short circuit current and short circuit braking torque EMP1-13F30**

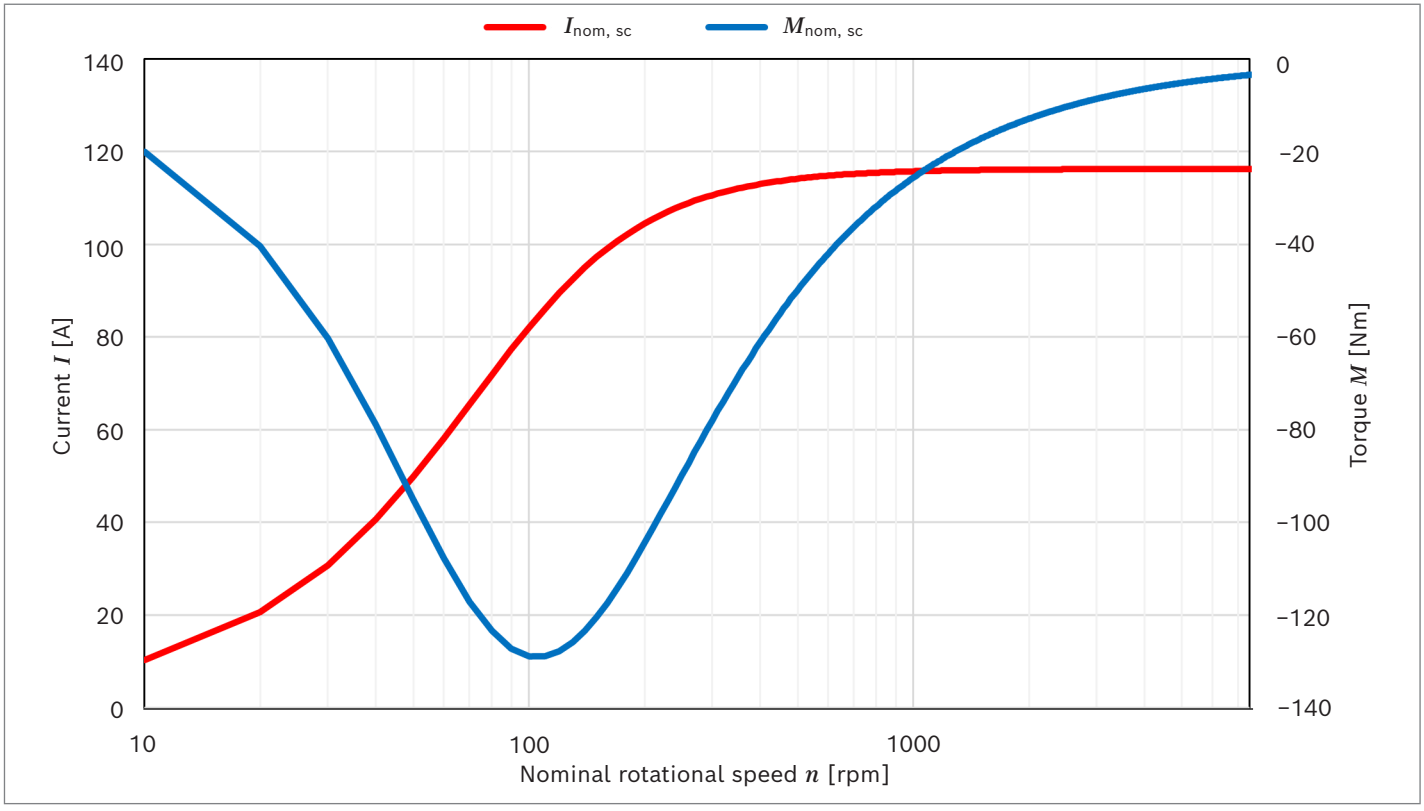

EMP1-13F40

Designation	Symbol	Unit	Value
S1 continuous torque at 200 rpm	$M_{S1,\ low\ rotational\ speed}$	Nm	207
S1 continuous current at 200 rpm	$I_{S1,\ low\ rotational\ speed}$	A_{RMS}	139
Nominal rotational speed	n_{nom}	rpm	4000
S1 continuous torque at n_{nom}	$M_{S1,\ nnom}$	Nm	184
S1 continuous current at n_{nom}	$I_{S1,\ nnom}$	A_{RMS}	128
S1 continuous power at n_{nom}	$P_{S1,\ nnom}$	kW	77
S1 continuous efficiency at n_{nom}	$\eta_{S1,\ nnom}$	%	95.24
S2 for 60s torque (maximum torque)[1]	$M_{S2,\ 60\ s}$	Nm	503
S2 for 60s current (maximum current)[1]	$I_{S2,\ 60\ s}$	A_{RMS}	519
S2 for 60s power (maximum power)[1]	$P_{S2,\ 60\ s}$	kW	145
Maximum rotational speed	n_{max}	rpm	10500
S1 continuous torque at n_{max}	$M_{S1,\ nmax}$	Nm	57
S1 continuous current at n_{max}	$I_{S1,\ nmax}$	A_{RMS}	86
S1 continuous power at n_{max}	$P_{S1,\ max}$	kW	63
S1 continuous efficiency at n_{max}	$\eta_{S1,\ nmax}$	%	94.31
S1 continuous torque at $P_{S1,\ max}$	$M_{S1,\ Pmax}$	Nm	154
S1 continuous current at $P_{S1,\ max}$	$I_{S1,\ Pmax}$	A_{RMS}	121
S1 continuous power at $P_{S1,\ max}$	$P_{S1,\ Pmax}$	kW	88
S1 continuous speed at $P_{S1,\ max}$	$n_{S1,\ Pmax}$	%	5460
S1 continuous efficiency at $P_{S1,\ max}$	$\eta_{S1,\ Pmax}$	%	95.88
Short circuit braking torque at nominal rotational speed[2]	$M_{nom,\ sc}$	Nm	6
Short circuit current at nominal speed[2]	$I_{nom,\ sc}$	A_{RMS}	163
Maximum short circuit braking torque[2]	$M_{max,\ sc}$	Nm	129
Maximum short circuit current[2]	$I_{max,\ sc}$	A_{RMS}	163
DC supply voltage	V_{DC}	V	700
Voltage for motor phases (outer conductor-outer conductor – RMS)	V_{LL}	V_{RMS}	475

Electric	Symbol	Unit	Value
Number of poles			8
Phase-phase voltage constant at 20 °C	k_{EMK}	V_{RMS} / 1000 rpm	85
Torque constant at 25 °C	k_T	Nm / A_{RMS}	1.54
Synchronous inductance (d-axis) at rated current	L_d	mH	0.61
Synchronous inductance (q-axis) at rated current	L_q	mH	1.56
Stator winding resistance (phase) at 20 °C	R_{LL}	Ω	0.0658
Cogging torque (unskewed)	M_{cog}	Nm	10.61
Torque ripple	$M_{Pk\text{-}Pk}$	Nm	22.35

1) For the S2 calculation, the starting temperature of the components is assumed to be 25 °C.
2) Magnet temperature at 20 °C

▼ **Torque EMP1-13F40**

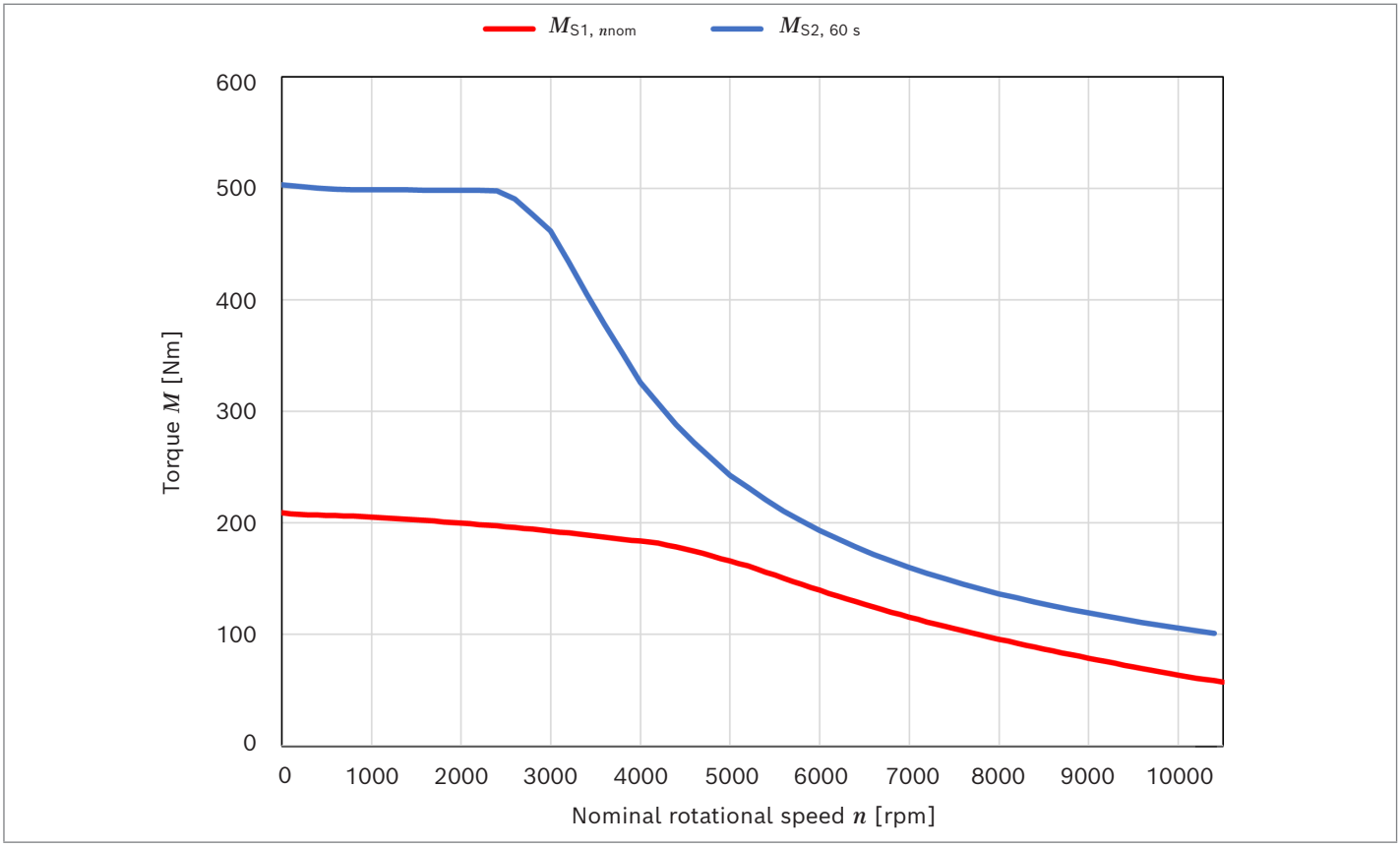

▼ **Power EMP1-13F40**

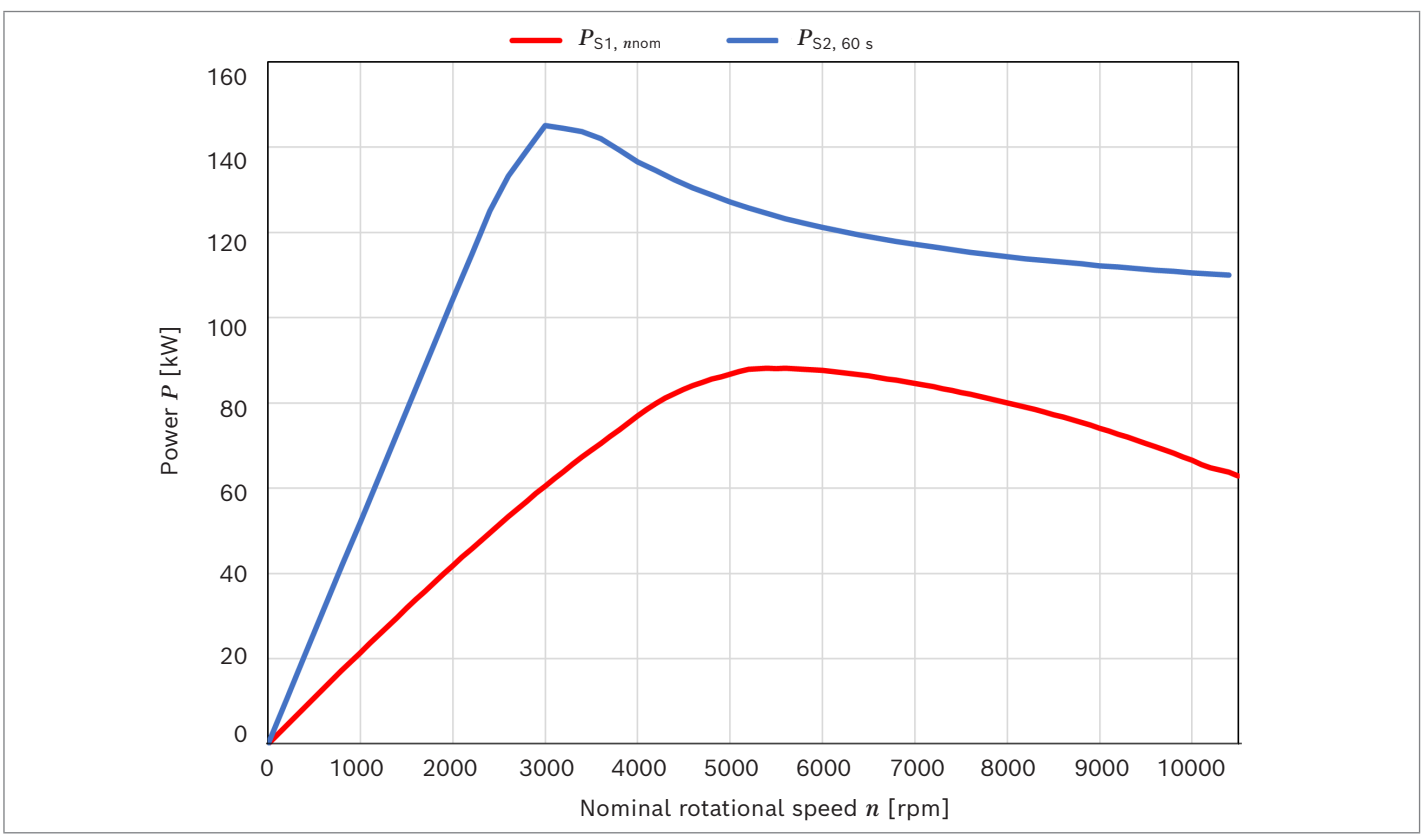

▼ **Short circuit current and short circuit braking torque EMP1-13F40**

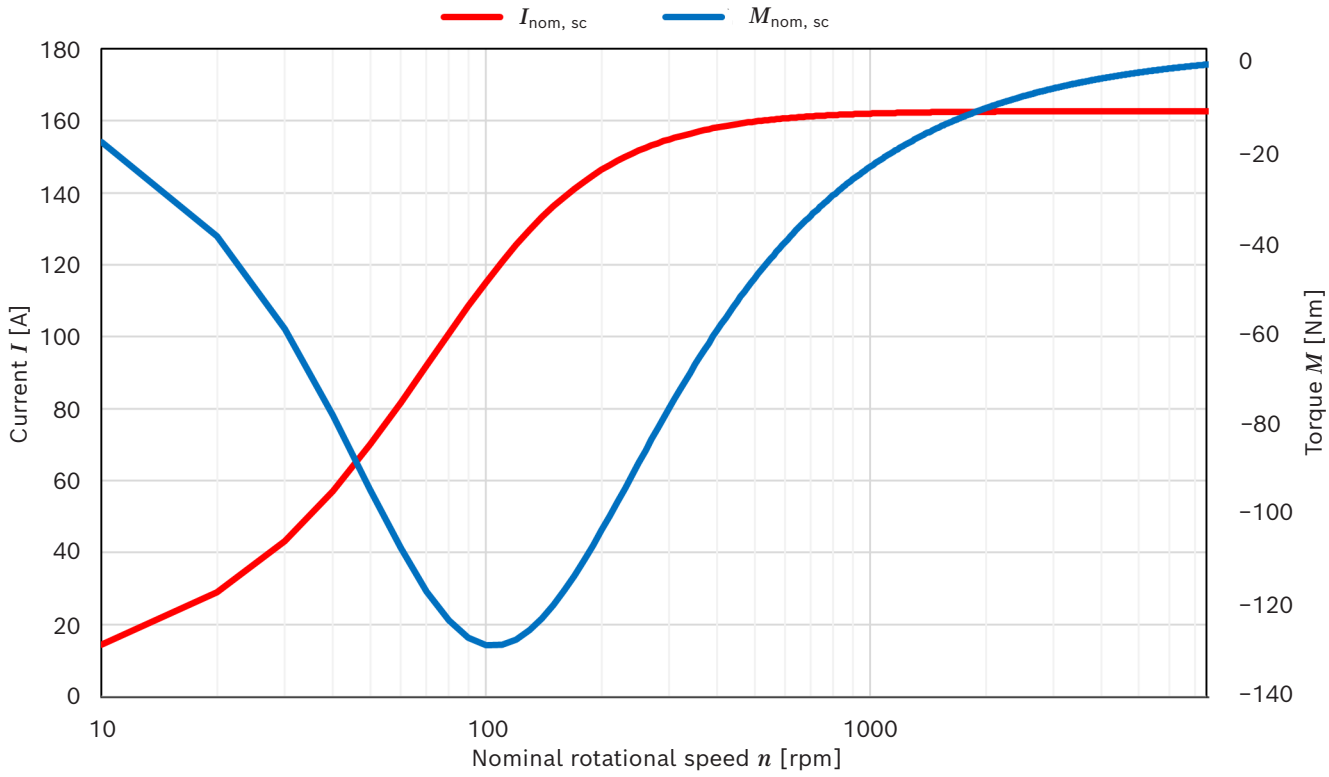

EMP1-13H20

Designation	Symbol	Unit	Value
S1 continuous torque at 200 rpm	$M_{S1,\ low\ rotational\ speed}$	Nm	278
S1 continuous current at 200 rpm	$I_{S1,\ low\ rotational\ speed}$	A_{RMS}	100
Nominal rotational speed	n_{nom}	rpm	2000
S1 continuous torque at n_{nom}	$M_{S1,\ nnom}$	Nm	266
S1 continuous current at n_{nom}	$I_{S1,\ nnom}$	A_{RMS}	97
S1 continuous power at n_{nom}	$P_{S1,\ nnom}$	kW	56
S1 continuous efficiency at n_{nom}	$\eta_{S1,\ nnom}$	%	93.16
S2 for 60s torque (maximum torque)[1]	$M_{S2,\ 60\ s}$	Nm	671
S2 for 60s current (maximum current)[1]	$I_{S2,\ 60\ s}$	A_{RMS}	371
S2 for 60s power (maximum power)[1]	$P_{S2,\ 60\ s}$	kW	102
Maximum rotational speed	n_{max}	rpm	10500
S1 continuous torque at n_{max}	$M_{S1,\ nmax}$	Nm	0
S1 continuous current at n_{max}	$I_{S1,\ nmax}$	A_{RMS}	15
S1 continuous power at n_{max}	$P_{S1,\ max}$	kW	0
S1 continuous efficiency at n_{max}	$\eta_{S1,\ nmax}$	%	0.00
S1 continuous torque at $P_{S1,\ max}$	$M_{S1,\ Pmax}$	Nm	171
S1 continuous current at $P_{S1,\ max}$	$I_{S1,\ Pmax}$	A_{RMS}	93
S1 continuous power at $P_{S1,\ max}$	$P_{S1,\ Pmax}$	kW	70
S1 continuous speed at $P_{S1,\ max}$	$n_{S1,\ Pmax}$	%	3885
S1 continuous efficiency at $P_{S1,\ max}$	$\eta_{S1,\ Pmax}$	%	94.17
Short circuit braking torque at nominal rotational speed[2]	$M_{nom,\ sc}$	Nm	16
Short circuit current at nominal speed[2]	$I_{nom,\ sc}$	A_{RMS}	117
Maximum short circuit braking torque[2]	$M_{max,\ sc}$	Nm	173
Maximum short circuit current[2]	$I_{max,\ sc}$	A_{RMS}	117
DC supply voltage	V_{DC}	V	700
Voltage for motor phases (outer conductor-outer conductor – RMS)	V_{LL}	V_{RMS}	475

Electric	Symbol	Unit	Value
Number of poles			8
Phase-phase voltage constant at 20 °C	k_{EMK}	V_{RMS} / 1000 rpm	157.81
Torque constant at 25 °C	k_T	Nm / A_{RMS}	3
Synchronous inductance (d-axis) at rated current	L_d	mH	1.6
Synchronous inductance (q-axis) at rated current	L_q	mH	3.13
Stator winding resistance (phase) at 20 °C	R_{LL}	Ω	0.1592
Cogging torque (unskewed)	M_{cog}	Nm	14.15
Torque ripple	$M_{Pk\text{-}Pk}$	Nm	30.43

1) For the S2 calculation, the starting temperature of the components is assumed to be 25 °C.
2) Magnet temperature at 20 °C

▼ **Torque EMP1-13H20**

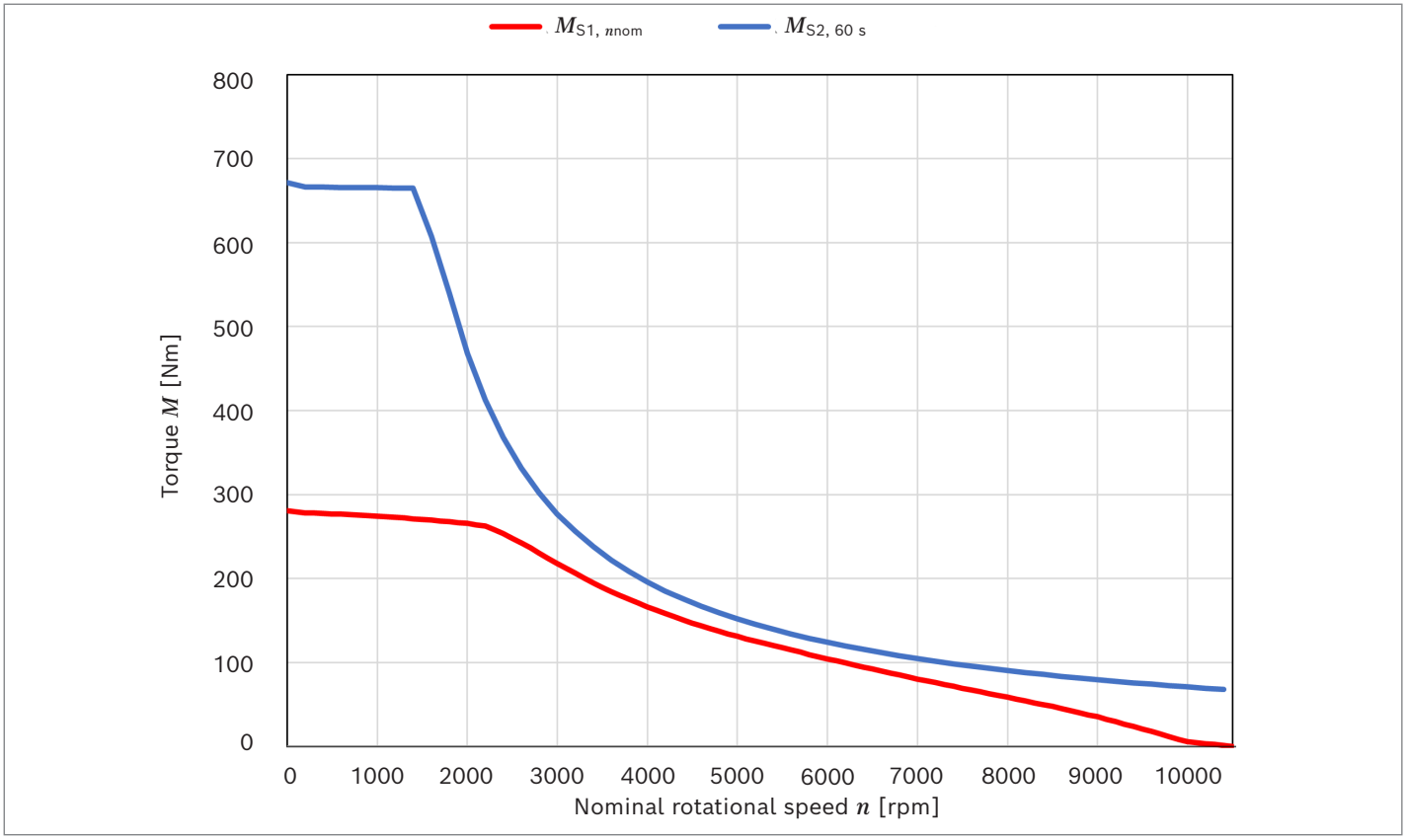

▼ **Power EMP1-13H20**

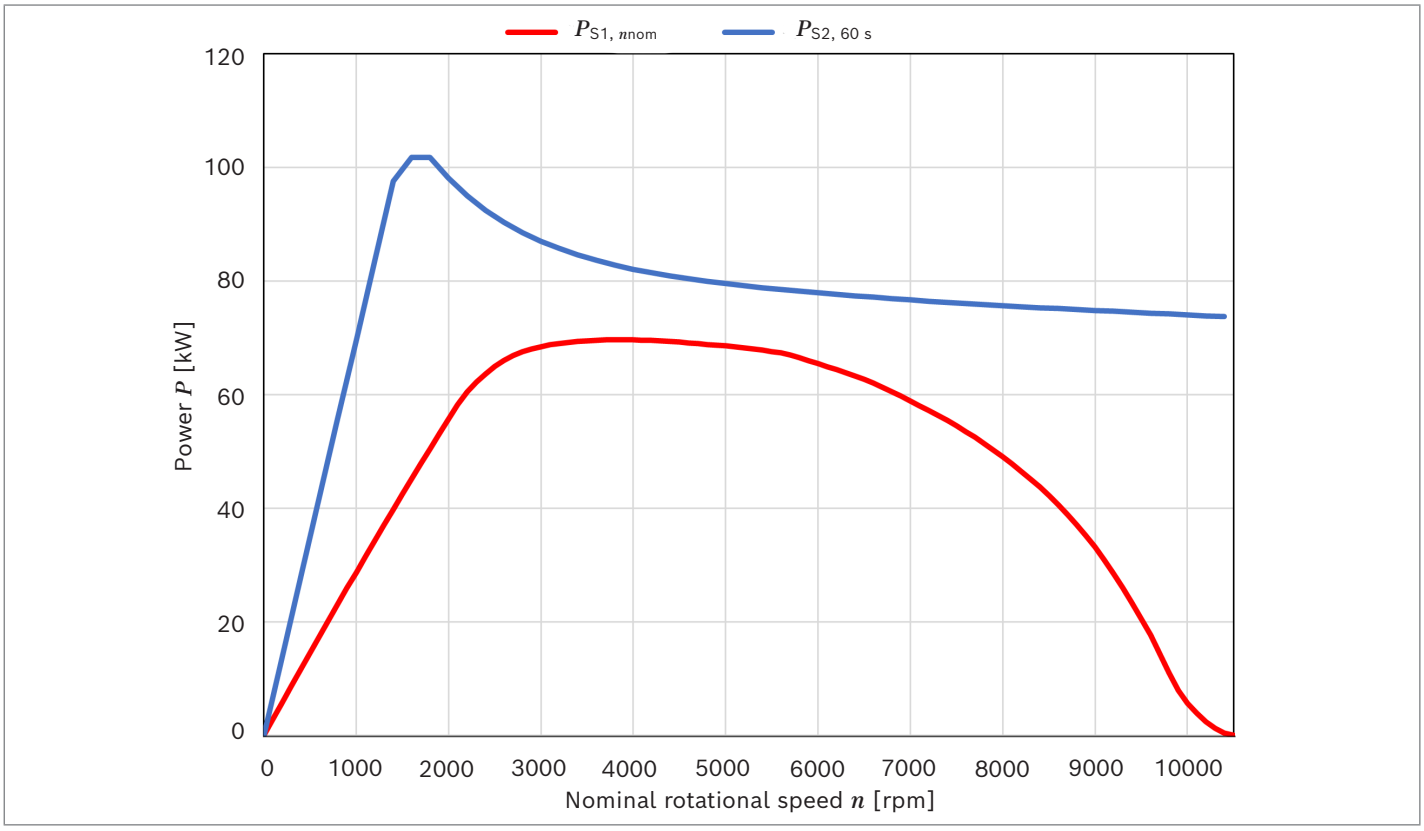

▼ **Short circuit current and short circuit braking torque EMP1-13H20**

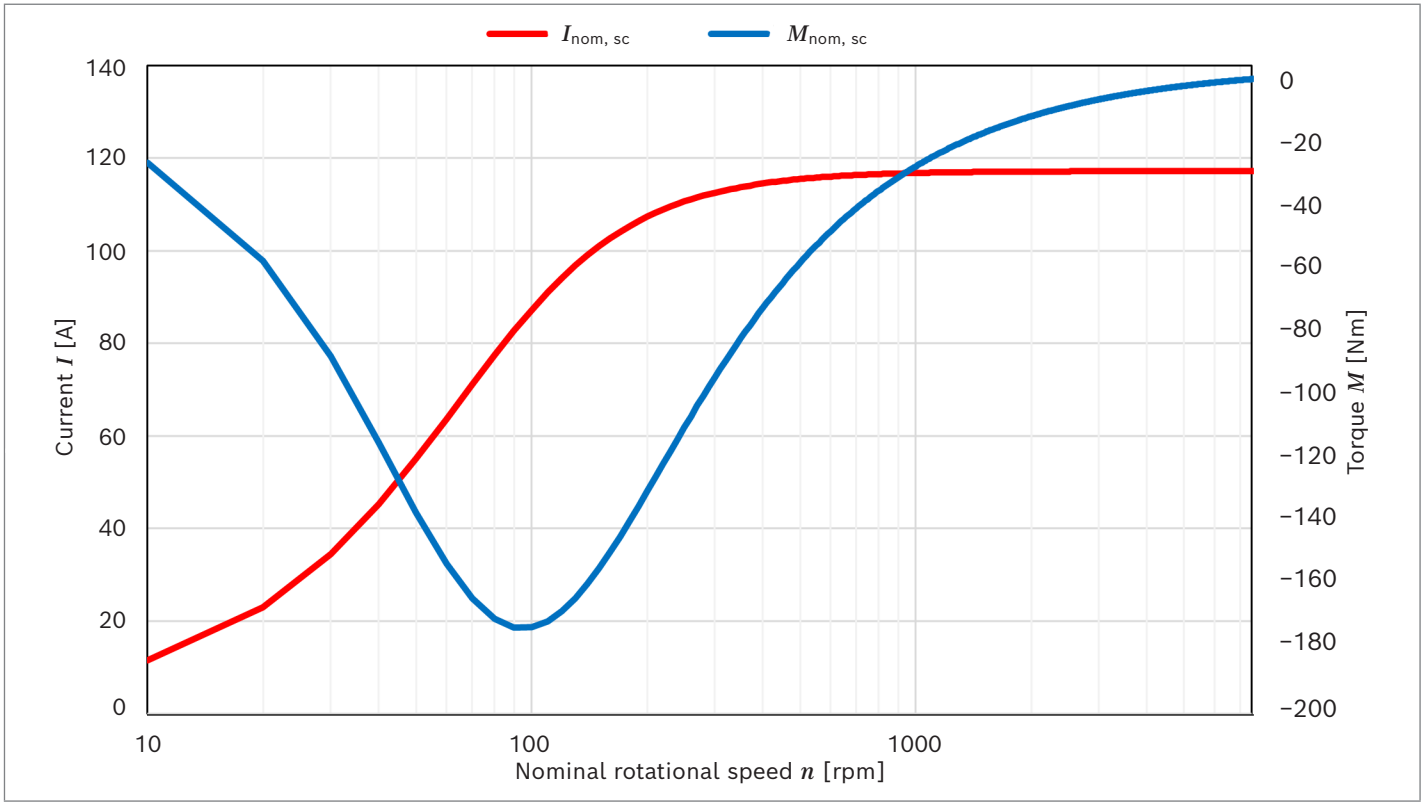

EMP1-13H30

Designation	Symbol	Unit	Value
S1 continuous torque at 200 rpm	$M_{S1,\ low\ rotational\ speed}$	Nm	280
S1 continuous current at 200 rpm	$I_{S1,\ low\ rotational\ speed}$	A_{RMS}	141
Nominal rotational speed	n_{nom}	rpm	3000
S1 continuous torque at n_{nom}	$M_{S1,\ nnom}$	Nm	259
S1 continuous current at n_{nom}	$I_{S1,\ nnom}$	A_{RMS}	134
S1 continuous power at n_{nom}	$P_{S1,\ nnom}$	kW	81
S1 continuous efficiency at n_{nom}	$\eta_{S1,\ nnom}$	%	94.82
S2 for 60s torque (maximum torque)[1]	$M_{S2,\ 60\ s}$	Nm	671
S2 for 60s current (maximum current)[1]	$I_{S2,\ 60\ s}$	A_{RMS}	519
S2 for 60s power (maximum power)[1]	$P_{S2,\ 60\ s}$	kW	145
Maximum rotational speed	n_{max}	rpm	10500
S1 continuous torque at n_{max}	$M_{S1,\ nmax}$	Nm	41
S1 continuous current at n_{max}	$I_{S1,\ nmax}$	A_{RMS}	85
S1 continuous power at n_{max}	$P_{S1,\ max}$	kW	45
S1 continuous efficiency at n_{max}	$\eta_{S1,\ nmax}$	%	90.63
S1 continuous torque at $P_{S1,\ max}$	$M_{S1,\ Pmax}$	Nm	184
S1 continuous current at $P_{S1,\ max}$	$I_{S1,\ Pmax}$	A_{RMS}	127
S1 continuous power at $P_{S1,\ max}$	$P_{S1,\ Pmax}$	kW	95
S1 continuous speed at $P_{S1,\ max}$	$n_{S1,\ Pmax}$	%	4935
S1 continuous efficiency at $P_{S1,\ max}$	$\eta_{S1,\ Pmax}$	%	95.34
Short circuit braking torque at nominal rotational speed[2]	$M_{nom,\ sc}$	Nm	10
Short circuit current at nominal speed[2]	$I_{nom,\ sc}$	A_{RMS}	164
Maximum short circuit braking torque[2]	$M_{max,\ sc}$	Nm	173
Maximum short circuit current[2]	$I_{max,\ sc}$	A_{RMS}	164
DC supply voltage	V_{DC}	V	700
Voltage for motor phases (outer conductor-outer conductor – RMS)	V_{LL}	V_{RMS}	475

Electric	Symbol	Unit	Value
Number of poles			8
Phase-phase voltage constant at 20 °C	k_{EMK}	V_{RMS} / 1000 rpm	118.4
Torque constant at 25 °C	k_T	Nm / A_{RMS}	2.25
Synchronous inductance (d-axis) at rated current	L_d	mH	1.22
Synchronous inductance (q-axis) at rated current	L_q	mH	3.09
Stator winding resistance (phase) at 20 °C	R_{LL}	Ω	0.0809
Cogging torque (unskewed)	M_{cog}	Nm	14.15
Torque ripple	$M_{Pk\text{-}Pk}$	Nm	30.3

1) For the S2 calculation, the starting temperature of the components is assumed to be 25 °C.
2) Magnet temperature at 20 °C

▼ **Torque EMP1-13H30**

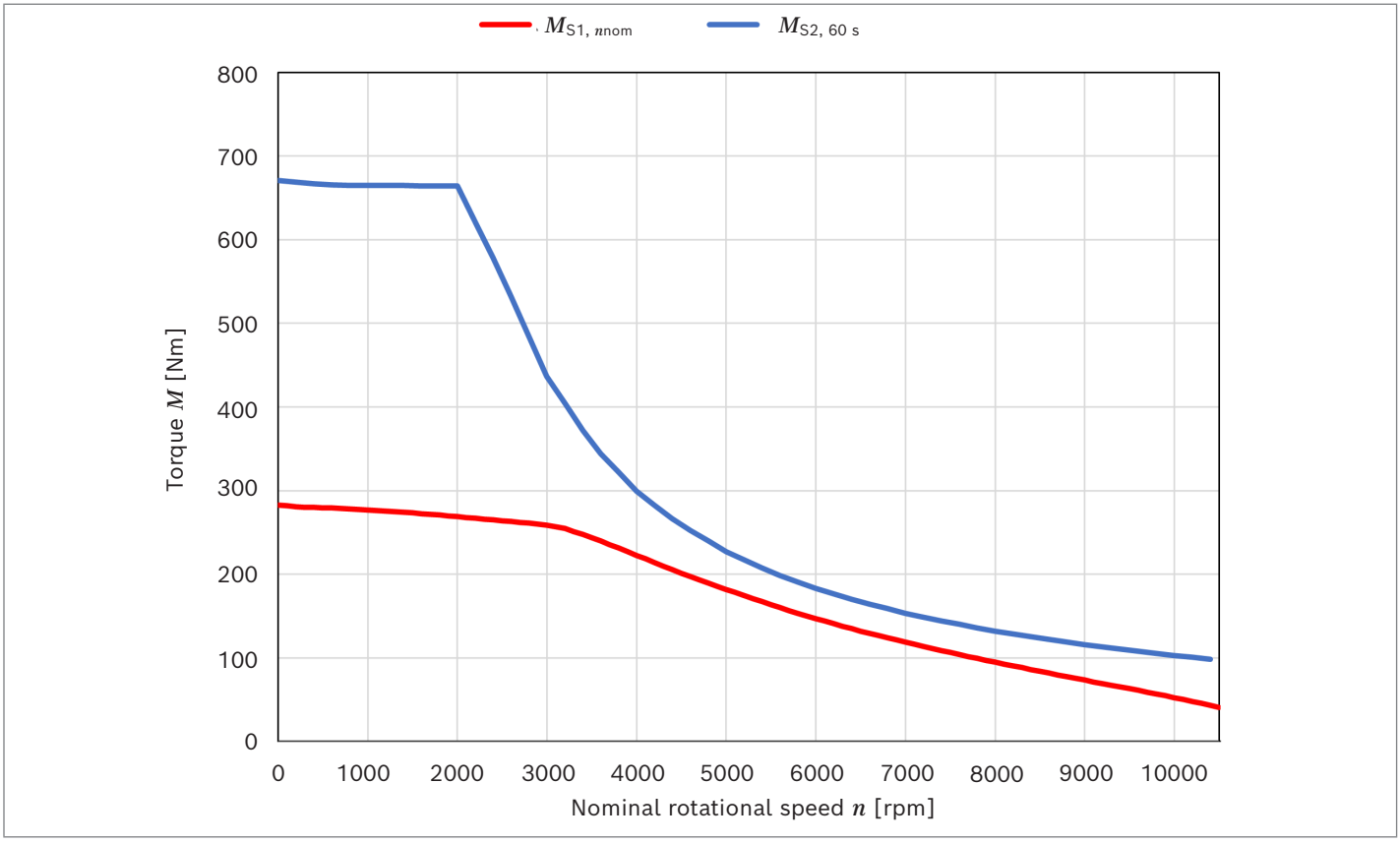

▼ **Power EMP1-13H30**

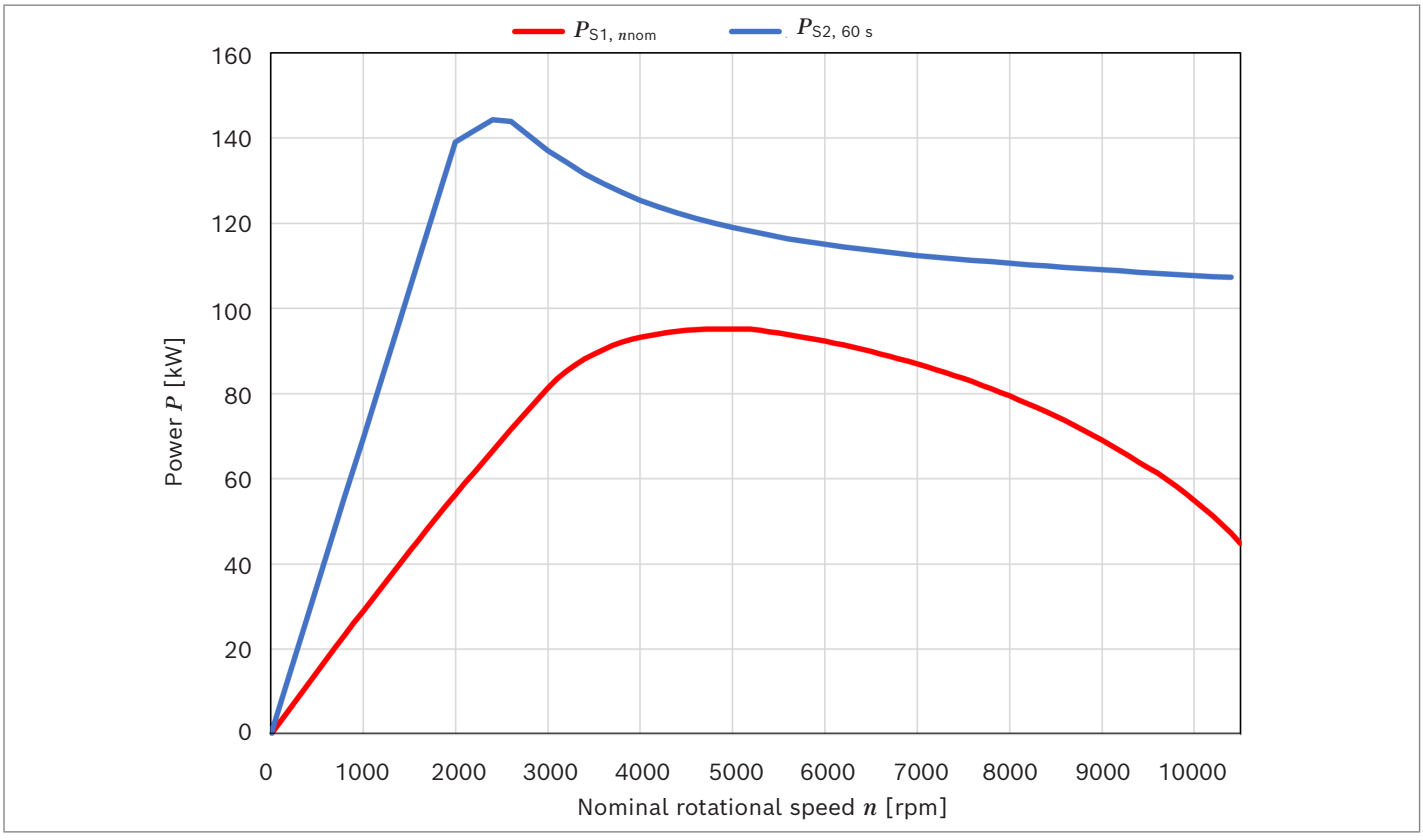

▼ **Short circuit current and short circuit braking torque EMP1-13H30**

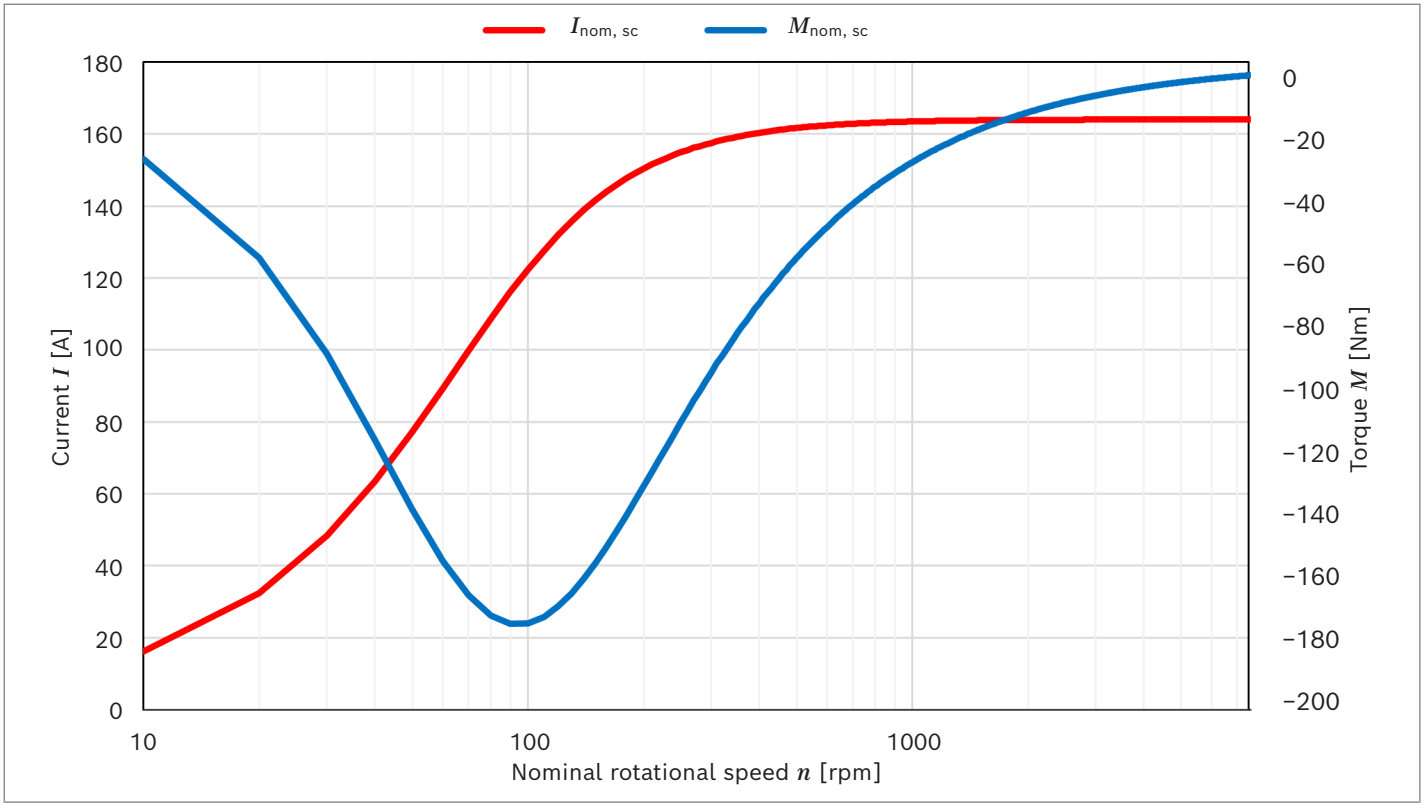

EMP1-13H40

Designation	Symbol	Unit	Value
S1 continuous torque at 200 rpm	$M_{S1,\ low\ rotational\ speed}$	Nm	278
S1 continuous current at 200 rpm	$I_{S1,\ low\ rotational\ speed}$	A_{RMS}	199
Nominal rotational speed	n_{nom}	rpm	4000
S1 continuous torque at n_{nom}	$M_{S1,\ nnom}$	Nm	240
S1 continuous current at n_{nom}	$I_{S1,\ nnom}$	A_{RMS}	179
S1 continuous power at n_{nom}	$P_{S1,\ nnom}$	kW	100
S1 continuous efficiency at n_{nom}	$\eta_{S1,\ nnom}$	%	95.52
S2 for 60s torque (maximum torque)[1]	$M_{S2,\ 60\ s}$	Nm	672
S2 for 60s current (maximum current)[1]	$I_{S2,\ 60\ s}$	A_{RMS}	743
S2 for 60s power (maximum power)[1]	$P_{S2,\ 60\ s}$	kW	210
Maximum rotational speed	n_{max}	rpm	10500
S1 continuous torque at n_{max}	$M_{S1,\ nmax}$	Nm	70
S1 continuous current at n_{max}	$I_{S1,\ nmax}$	A_{RMS}	108
S1 continuous power at n_{max}	$P_{S1,\ max}$	kW	77
S1 continuous efficiency at n_{max}	$\eta_{S1,\ nmax}$	%	94.36
S1 continuous torque at $P_{S1,\ max}$	$M_{S1,\ Pmax}$	Nm	196
S1 continuous current at $P_{S1,\ max}$	$I_{S1,\ Pmax}$	A_{RMS}	160
S1 continuous power at $P_{S1,\ max}$	$P_{S1,\ Pmax}$	kW	116
S1 continuous speed at $P_{S1,\ max}$	$n_{S1,\ Pmax}$	%	5670
S1 continuous efficiency at $P_{S1,\ max}$	$\eta_{S1,\ Pmax}$	%	96.20
Short circuit braking torque at nominal rotational speed[2]	$M_{nom,\ sc}$	Nm	8
Short circuit current at nominal speed[2]	$I_{nom,\ sc}$	A_{RMS}	234
Maximum short circuit braking torque[2]	$M_{max,\ sc}$	Nm	173
Maximum short circuit current[2]	$I_{max,\ sc}$	A_{RMS}	234
DC supply voltage	V_{DC}	V	700
Voltage for motor phases (outer conductor-outer conductor – RMS)	V_{LL}	V_{RMS}	475

Electric	Symbol	Unit	Value
Number of poles			8
Phase-phase voltage constant at 20 °C	k_{EMK}	V_{RMS} / 1000 rpm	79.4
Torque constant at 25 °C	k_T	Nm / A_{RMS}	1.39
Synchronous inductance (d-axis) at rated current	L_d	mH	0.39
Synchronous inductance (q-axis) at rated current	L_q	mH	0.98
Stator winding resistance (phase) at 20 °C	R_{LL}	Ω	0.0389
Cogging torque (unskewed)	M_{cog}	Nm	14.15
Torque ripple	$M_{Pk\text{-}Pk}$	Nm	29.6

1) For the S2 calculation, the starting temperature of the components is assumed to be 25 °C.
2) Magnet temperature at 20 °C

▼ **Torque EMP1-13H40**

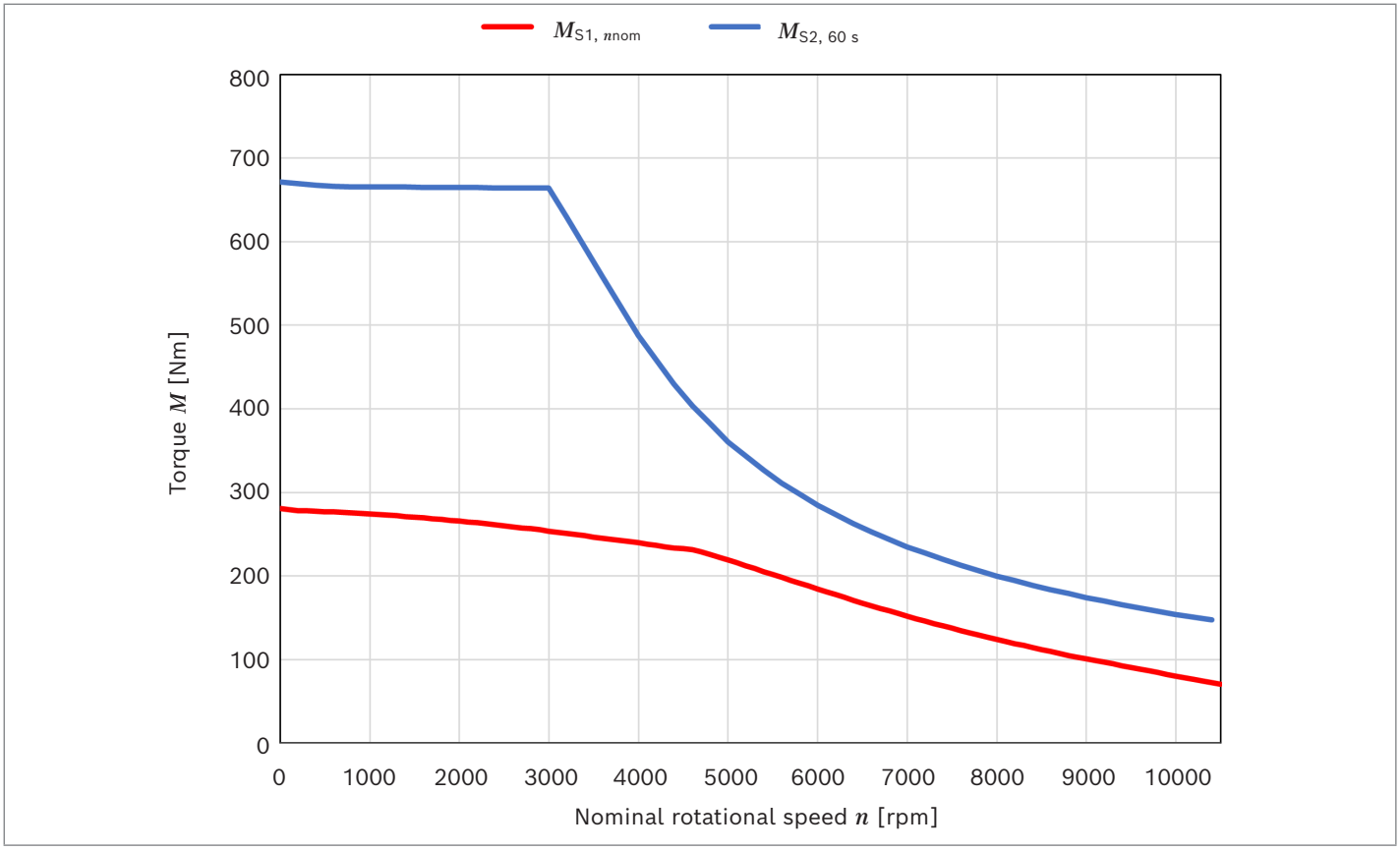

▼ **Power EMP1-13H40**

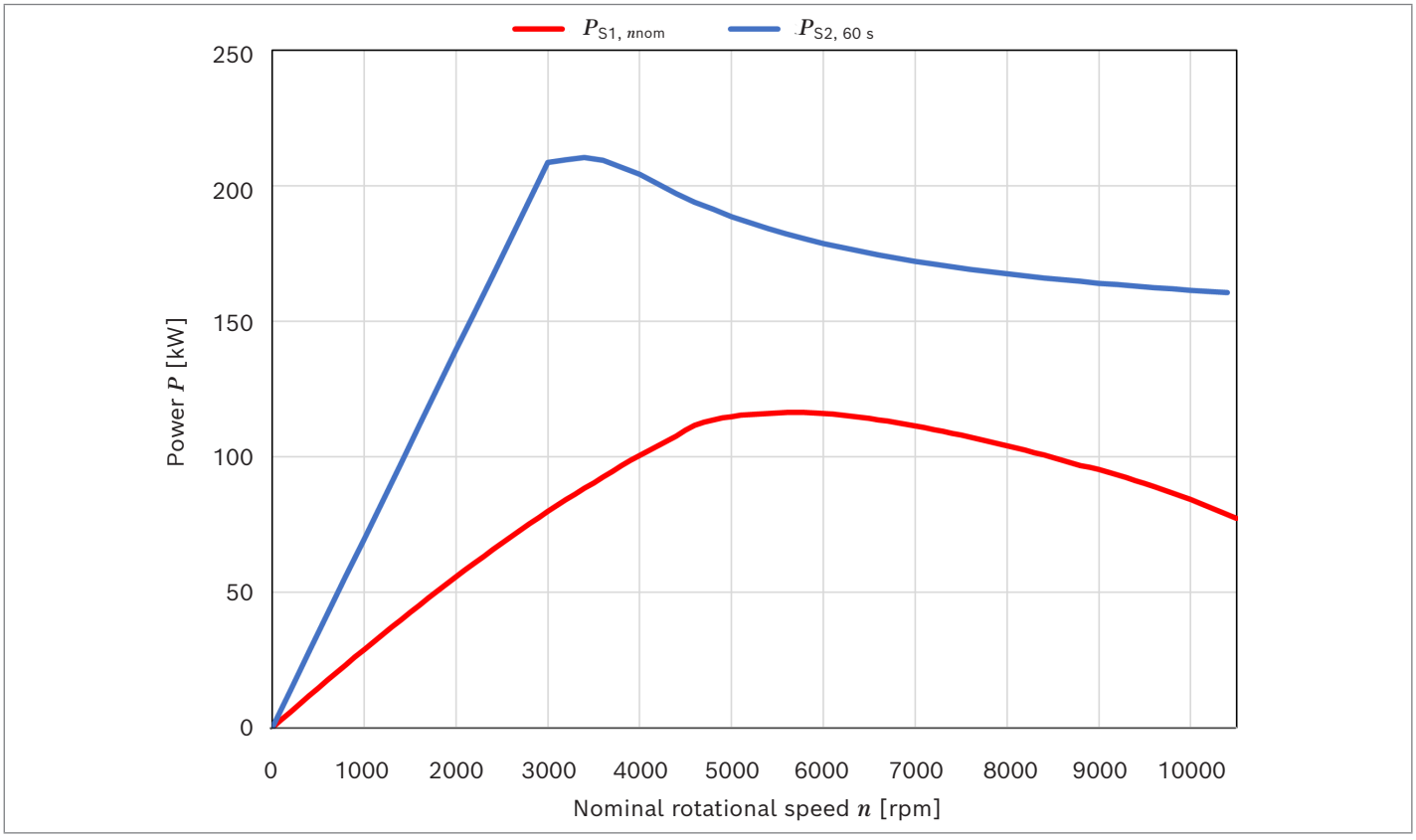

▼ **Short circuit current and short circuit braking torque EMP1-13H40**

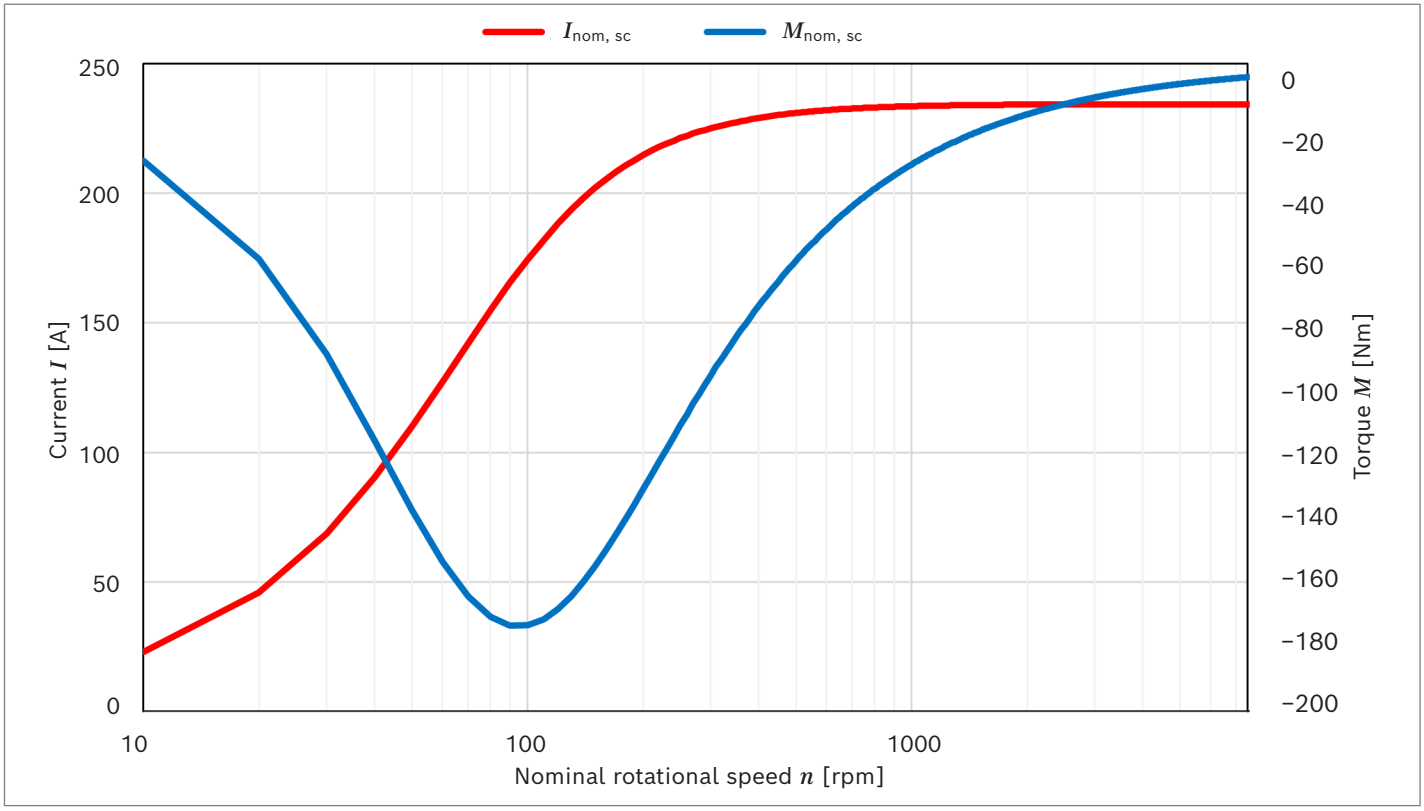

EMP1-13J20

Designation	Symbol	Unit	Value
S1 continuous torque at 200 rpm	$M_{S1,\ low\ rotational\ speed}$	Nm	351
S1 continuous current at 200 rpm	$I_{S1,\ low\ rotational\ speed}$	A_{RMS}	118
Nominal rotational speed	n_{nom}	rpm	2000
S1 continuous torque at n_{nom}	$M_{S1,\ nnom}$	Nm	334
S1 continuous current at n_{nom}	$I_{S1,\ nnom}$	A_{RMS}	114
S1 continuous power at n_{nom}	$P_{S1,\ nnom}$	kW	70
S1 continuous efficiency at n_{nom}	$\eta_{S1,\ nnom}$	%	93.55
S2 for 60s torque (maximum torque)[1]	$M_{S2,\ 60\ s}$	Nm	839
S2 for 60s current (maximum current)[1]	$I_{S2,\ 60\ s}$	A_{RMS}	433
S2 for 60s power (maximum power)[1]	$P_{S2,\ 60\ s}$	kW	120
Maximum rotational speed	n_{max}	rpm	10500
S1 continuous torque at n_{max}	$M_{S1,\ nmax}$	Nm	0
S1 continuous current at n_{max}	$I_{S1,\ nmax}$	A_{RMS}	0
S1 continuous power at n_{max}	$P_{S1,\ max}$	kW	0
S1 continuous efficiency at n_{max}	$\eta_{S1,\ nmax}$	%	0.00
S1 continuous torque at $P_{S1,\ max}$	$M_{S1,\ Pmax}$	Nm	226
S1 continuous current at $P_{S1,\ max}$	$I_{S1,\ Pmax}$	A_{RMS}	111
S1 continuous power at $P_{S1,\ max}$	$P_{S1,\ Pmax}$	kW	82
S1 continuous speed at $P_{S1,\ max}$	$n_{S1,\ Pmax}$	%	3465
S1 continuous efficiency at $P_{S1,\ max}$	$\eta_{S1,\ Pmax}$	%	94.18
Short circuit braking torque at nominal rotational speed[2]	$M_{nom,\ sc}$	Nm	18
Short circuit current at nominal speed[2]	$I_{nom,\ sc}$	A_{RMS}	137
Maximum short circuit braking torque[2]	$M_{max,\ sc}$	Nm	218
Maximum short circuit current[2]	$I_{max,\ sc}$	A_{RMS}	137
DC supply voltage	V_{DC}	V	700
Voltage for motor phases (outer conductor-outer conductor – RMS)	V_{LL}	V_{RMS}	475

Electric	Symbol	Unit	Value
Number of poles			8
Phase-phase voltage constant at 20 °C	k_{EMK}	V_{RMS} / 1000 rpm	169.09
Torque constant at 25 °C	k_T	Nm / A_{RMS}	3.22
Synchronous inductance (d-axis) at rated current	L_d	mH	1.5
Synchronous inductance (q-axis) at rated current	L_q	mH	3.04
Stator winding resistance (phase) at 20 °C	R_{LL}	Ω	0.1352
Cogging torque (unskewed)	M_{cog}	Nm	17.69
Torque ripple	$M_{Pk\text{-}Pk}$	Nm	38.11

1) For the S2 calculation, the starting temperature of the components is assumed to be 25 °C.
2) Magnet temperature at 20 °C

▼ **Torque EMP1-13J20**

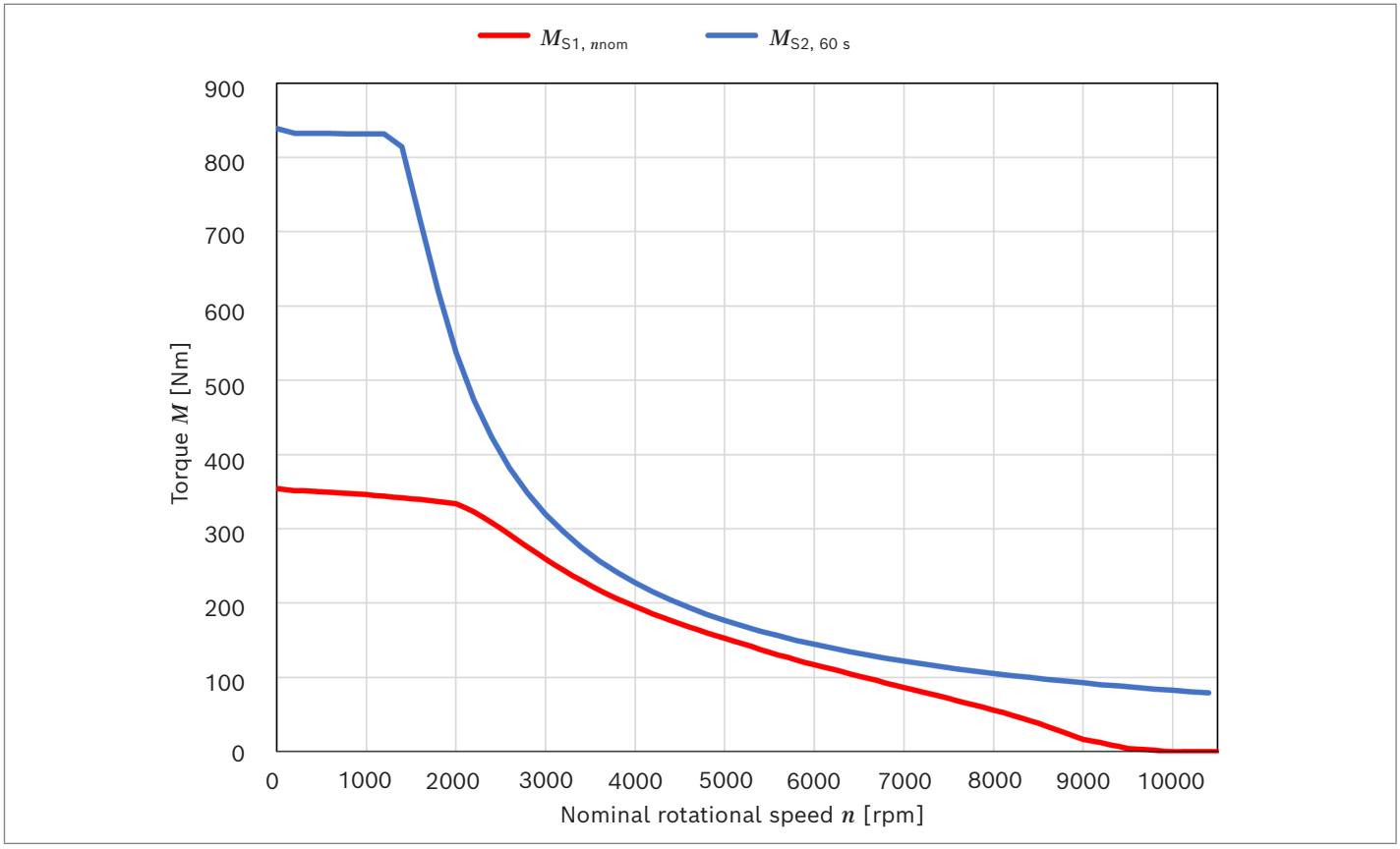

▼ **Power EMP1-13J20**

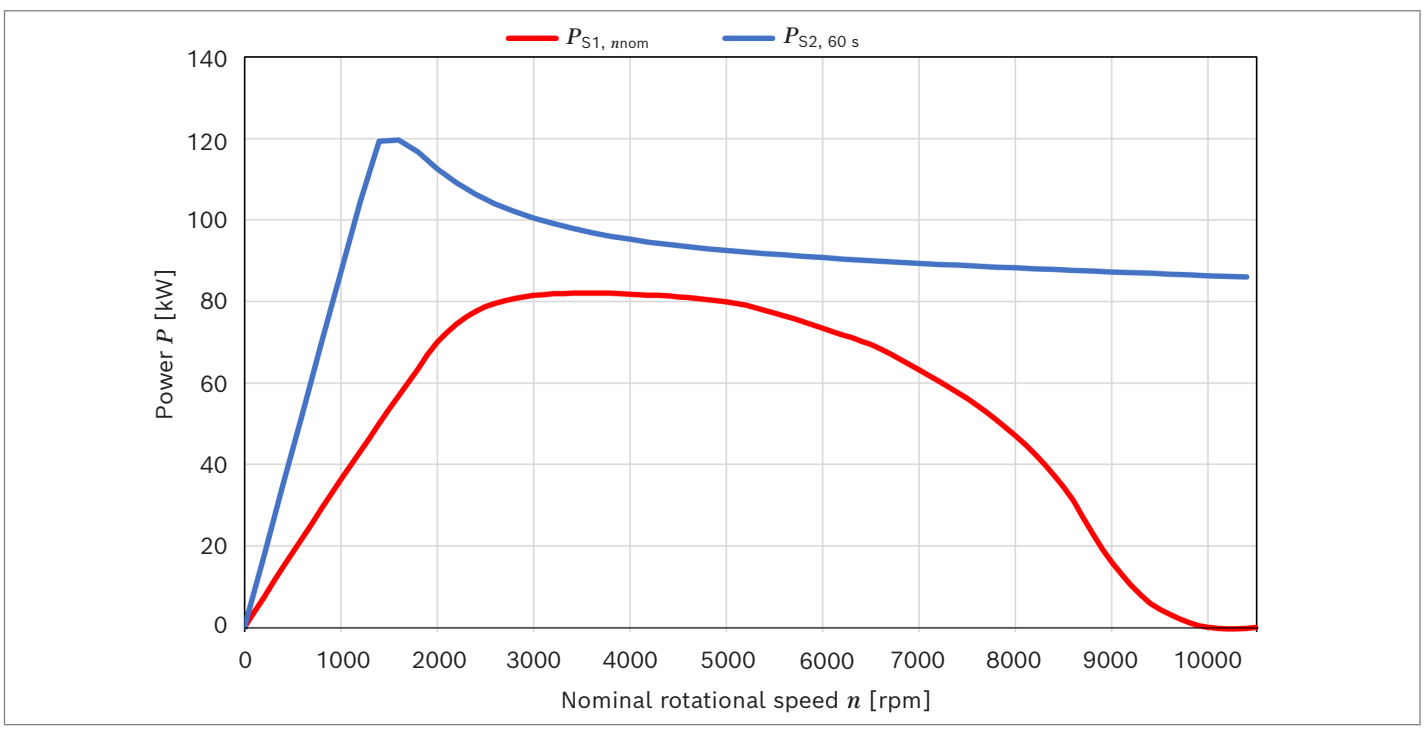

▼ **Short circuit current and short circuit braking torque EMP1-13J20**

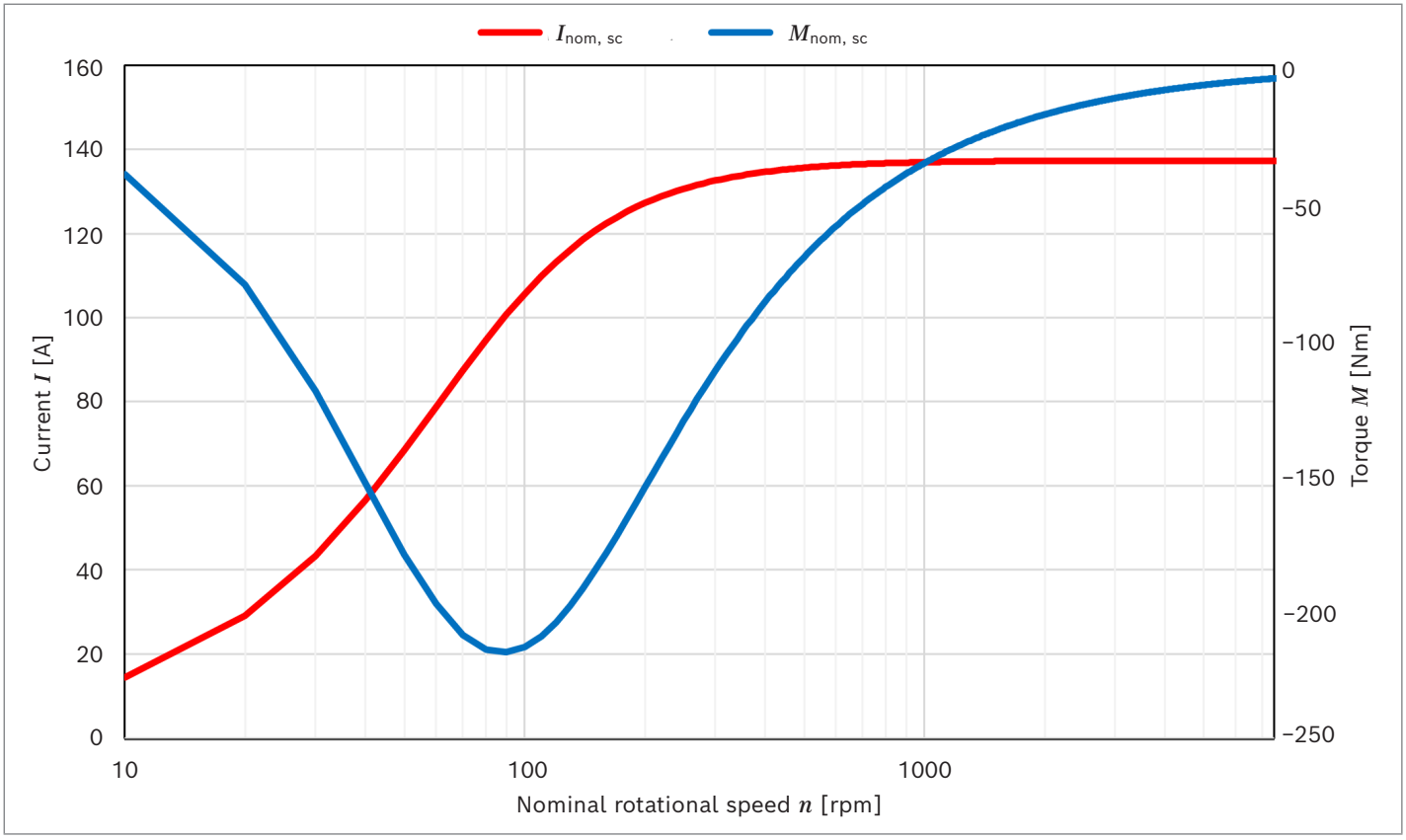

EMP1-13J30

Designation	Symbol	Unit	Value
S1 continuous torque at 200 rpm	$M_{S1,\ low\ rotational\ speed}$	Nm	350
S1 continuous current at 200 rpm	$I_{S1,\ low\ rotational\ speed}$	A_{RMS}	176
Nominal rotational speed	n_{nom}	rpm	3000
S1 continuous torque at n_{nom}	$M_{S1,\ nnom}$	Nm	319
S1 continuous current at n_{nom}	$I_{S1,\ nnom}$	A_{RMS}	165
S1 continuous power at n_{nom}	$P_{S1,\ nnom}$	kW	100
S1 continuous efficiency at n_{nom}	$\eta_{S1,\ nnom}$	%	95.08
S2 for 60s torque (maximum torque)[1]	$M_{S2,\ 60\ s}$	Nm	840
S2 for 60s current (maximum current)[1]	$I_{S2,\ 60\ s}$	A_{RMS}	650
S2 for 60s power (maximum power)[1]	$P_{S2,\ 60\ s}$	kW	182
Maximum rotational speed	n_{max}	rpm	10500
S1 continuous torque at n_{max}	$M_{S1,\ nmax}$	Nm	35
S1 continuous current at n_{max}	$I_{S1,\ nmax}$	A_{RMS}	99
S1 continuous power at n_{max}	$P_{S1,\ max}$	kW	38
S1 continuous efficiency at n_{max}	$\eta_{S1,\ nmax}$	%	86.84
S1 continuous torque at $P_{S1,\ max}$	$M_{S1,\ Pmax}$	Nm	237
S1 continuous current at $P_{S1,\ max}$	$I_{S1,\ Pmax}$	A_{RMS}	157
S1 continuous power at $P_{S1,\ max}$	$P_{S1,\ Pmax}$	kW	117
S1 continuous speed at $P_{S1,\ max}$	$n_{S1,\ Pmax}$	%	4725
S1 continuous efficiency at $P_{S1,\ max}$	$\eta_{S1,\ Pmax}$	%	95.64
Short circuit braking torque at nominal rotational speed[2]	$M_{nom,\ sc}$	Nm	12
Short circuit current at nominal speed[2]	$I_{nom,\ sc}$	A_{RMS}	206
Maximum short circuit braking torque[2]	$M_{max,\ sc}$	Nm	218
Maximum short circuit current[2]	$I_{max,\ sc}$	A_{RMS}	206
DC supply voltage	V_{DC}	V	700
Voltage for motor phases (outer conductor-outer conductor – RMS)	V_{LL}	V_{RMS}	475

Electric	Symbol	Unit	Value
Number of poles			8
Phase-phase voltage constant at 20 °C	k_{EMK}	V_{RMS} / 1000 rpm	109
Torque constant at 25 °C	k_T	Nm / A_{RMS}	2
Synchronous inductance (d-axis) at rated current	L_d	mH	0.64
Synchronous inductance (q-axis) at rated current	L_q	mH	1.63
Stator winding resistance (phase) at 20 °C	R_{LL}	Ω	0.063
Cogging torque (unskewed)	M_{cog}	Nm	17.69
Torque ripple	$M_{Pk\text{-}Pk}$	Nm	37.76

1) For the S2 calculation, the starting temperature of the components is assumed to be 25 °C.
2) Magnet temperature at 20 °C

▼ **Torque EMP1-13J30**

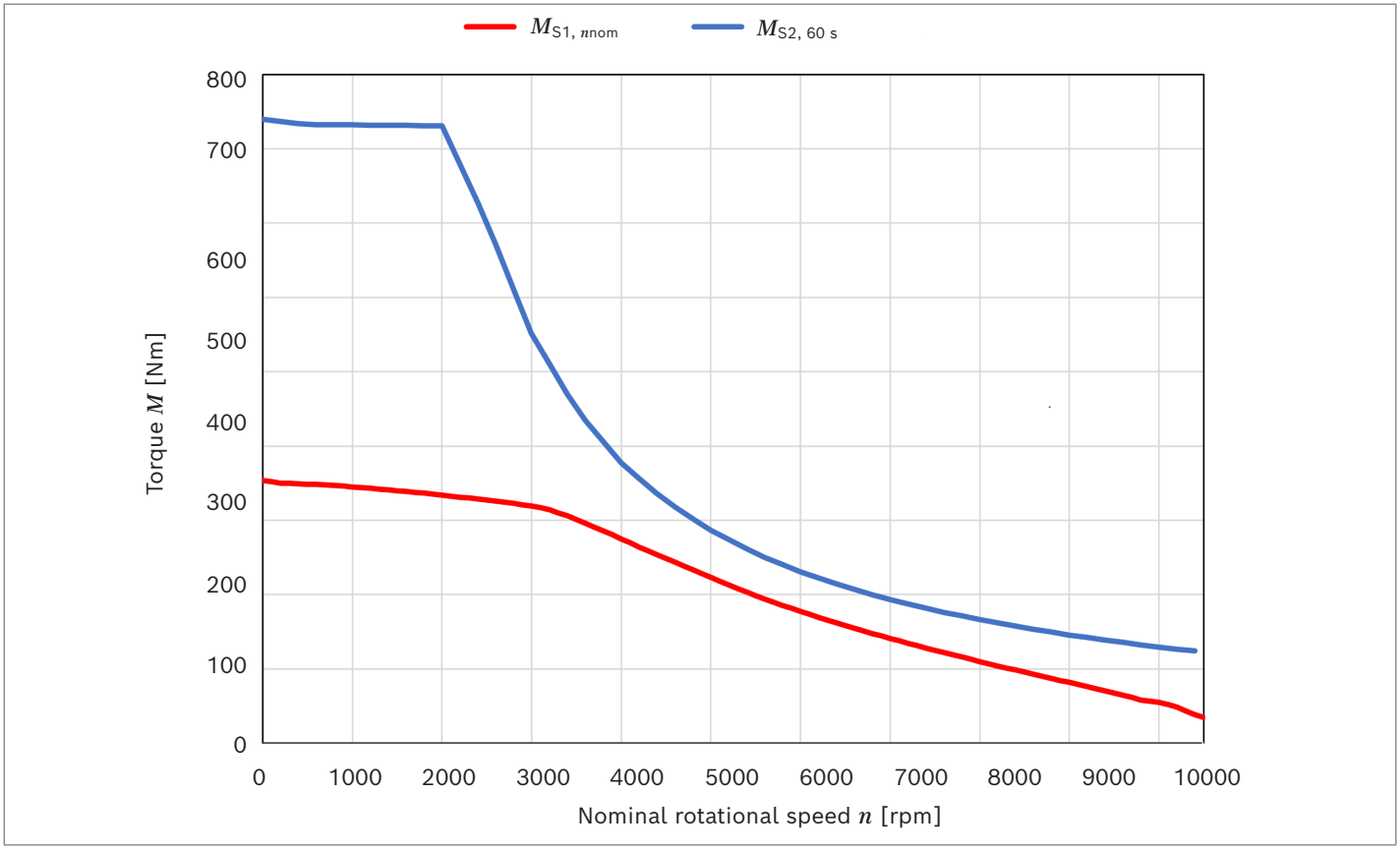

▼ **Power EMP1-13J30**

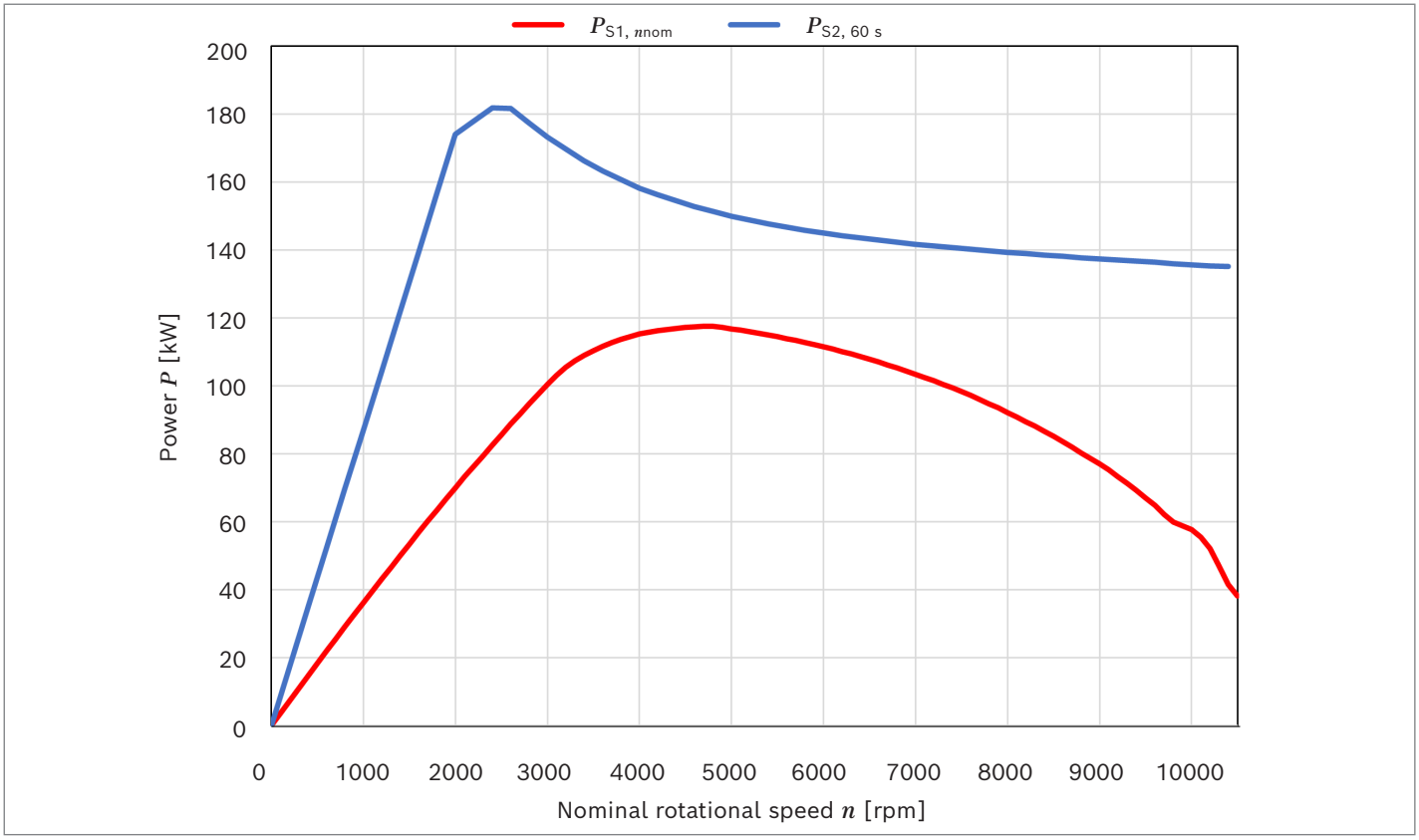

▼ **Short circuit current and short circuit braking torque EMP1-13J30**

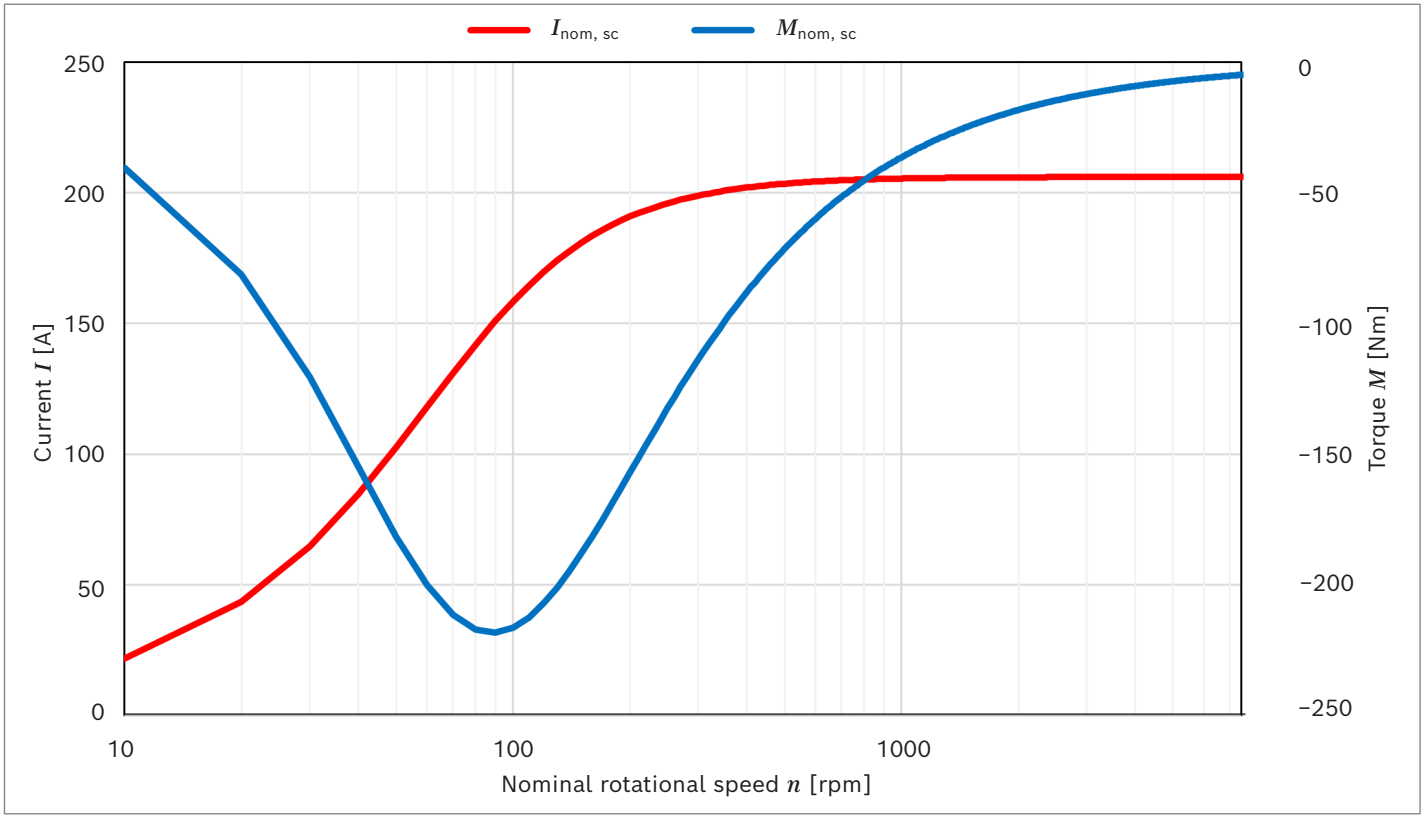

EMP1-13J40

Designation	Symbol	Unit	Value
S1 continuous torque at 200 rpm	$M_{S1,\ low\ rotational\ speed}$	Nm	351
S1 continuous current at 200 rpm	$I_{S1,\ low\ rotational\ speed}$	A_{RMS}	235
Nominal rotational speed	n_{nom}	rpm	4000
S1 continuous torque at n_{nom}	$M_{S1,\ nnom}$	Nm	300
S1 continuous current at n_{nom}	$I_{S1,\ nnom}$	A_{RMS}	207
S1 continuous power at n_{nom}	$P_{S1,\ nnom}$	kW	126
S1 continuous efficiency at n_{nom}	$\eta_{S1,\ nnom}$	%	95.81
S2 for 60s torque (maximum torque)[1]	$M_{S2,\ 60\ s}$	Nm	839
S2 for 60s current (maximum current)[1]	$I_{S2,\ 60\ s}$	A_{RMS}	866
S2 for 60s power (maximum power)[1]	$P_{S2,\ 60\ s}$	kW	248
Maximum rotational speed	n_{max}	rpm	10500
S1 continuous torque at n_{max}	$M_{S1,\ nmax}$	Nm	69
S1 continuous current at n_{max}	$I_{S1,\ nmax}$	A_{RMS}	119
S1 continuous power at n_{max}	$P_{S1,\ max}$	kW	75
S1 continuous efficiency at n_{max}	$\eta_{S1,\ nmax}$	%	93.31
S1 continuous torque at $P_{S1,\ max}$	$M_{S1,\ Pmax}$	Nm	248
S1 continuous current at $P_{S1,\ max}$	$I_{S1,\ Pmax}$	A_{RMS}	188
S1 continuous power at $P_{S1,\ max}$	$P_{S1,\ Pmax}$	kW	136
S1 continuous speed at $P_{S1,\ max}$	$n_{S1,\ Pmax}$	%	5250
S1 continuous efficiency at $P_{S1,\ max}$	$\eta_{S1,\ Pmax}$	%	96.22
Short circuit braking torque at nominal rotational speed[2]	$M_{nom,\ sc}$	Nm	9
Short circuit current at nominal speed[2]	$I_{nom,\ sc}$	A_{RMS}	275
Maximum short circuit braking torque[2]	$M_{max,\ sc}$	Nm	218
Maximum short circuit current[2]	$I_{max,\ sc}$	A_{RMS}	275
DC supply voltage	V_{DC}	V	700
Voltage for motor phases (outer conductor-outer conductor – RMS)	V_{LL}	V_{RMS}	475

Electric	Symbol	Unit	Value
Number of poles			8
Phase-phase voltage constant at 20 °C	k_{EMK}	V_{RMS} / 1000 rpm	84.54
Torque constant at 25 °C	k_T	Nm / A_{RMS}	1.61
Synchronous inductance (d-axis) at rated current	L_d	mH	0.41
Synchronous inductance (q-axis) at rated current	L_q	mH	0.91
Stator winding resistance (phase) at 20 °C	R_{LL}	Ω	0.0338
Cogging torque (unskewed)	M_{cog}	Nm	17.69
Torque ripple	$M_{Pk\text{-}Pk}$	Nm	37.03

1) For the S2 calculation, the starting temperature of the components is assumed to be 25 °C.
2) Magnet temperature at 20 °C

▼ **Torque EMP1-13J40**

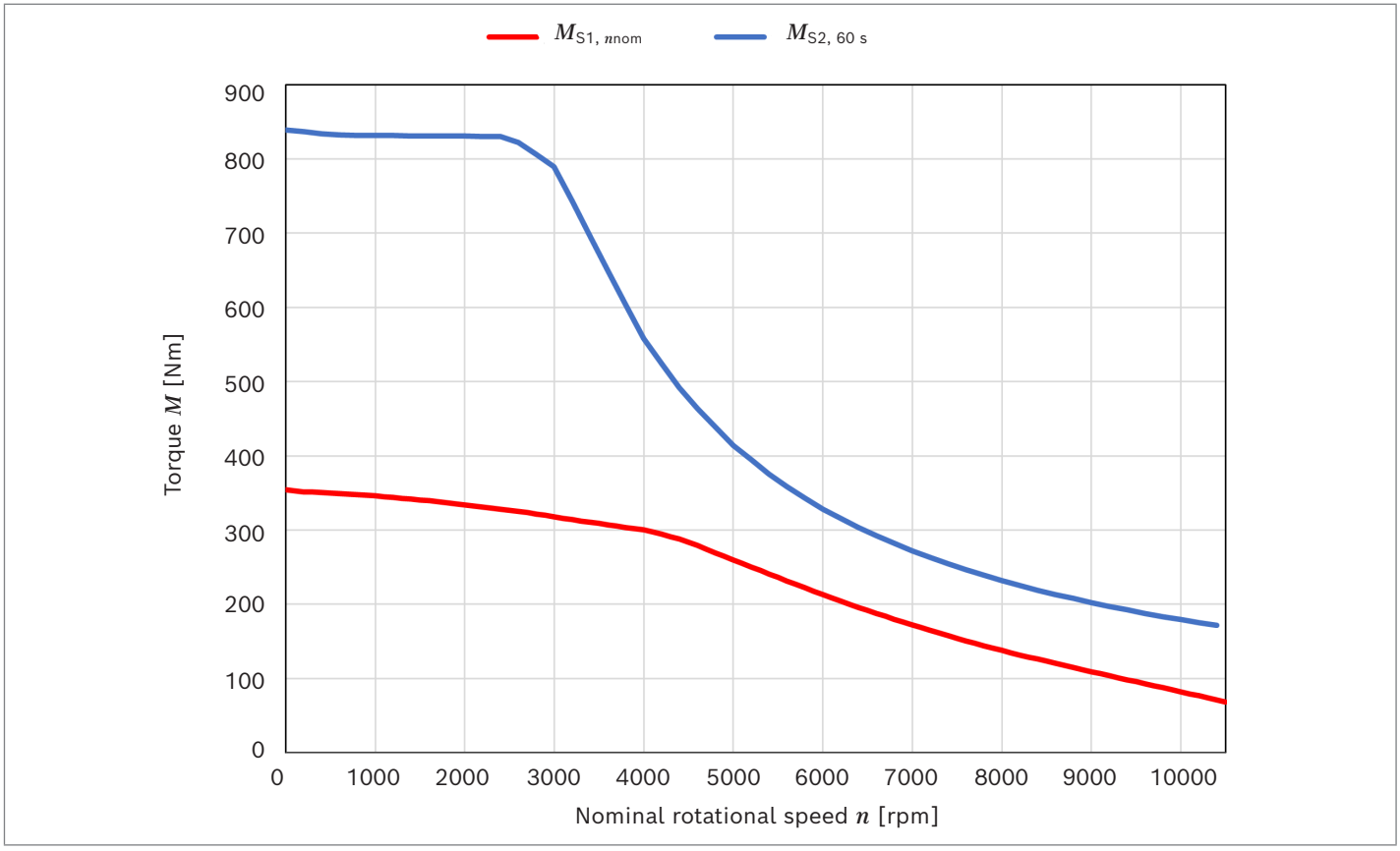

▼ **Power EMP1-13J40**

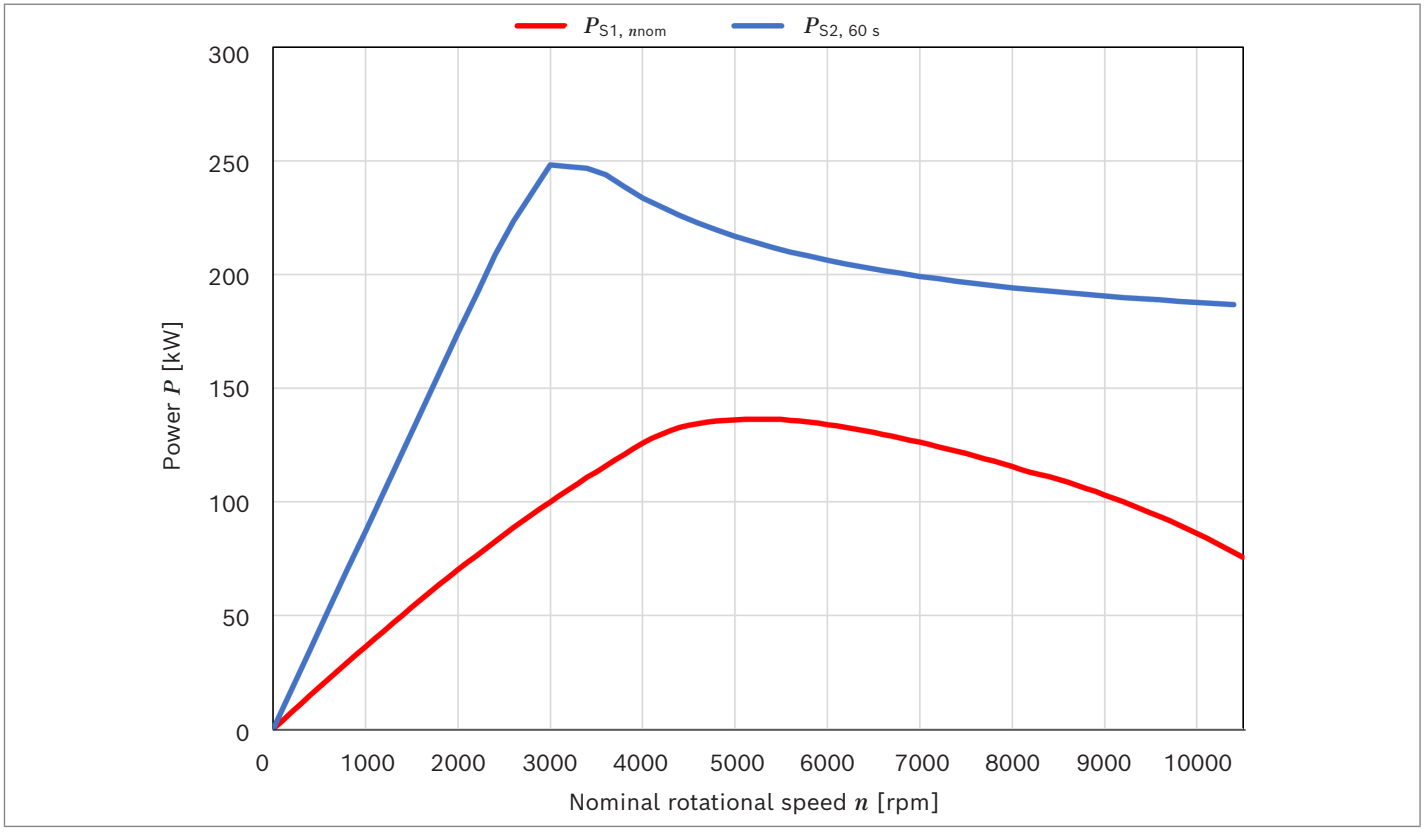

▼ **Short circuit current and short circuit braking torque EMP1-13J40**

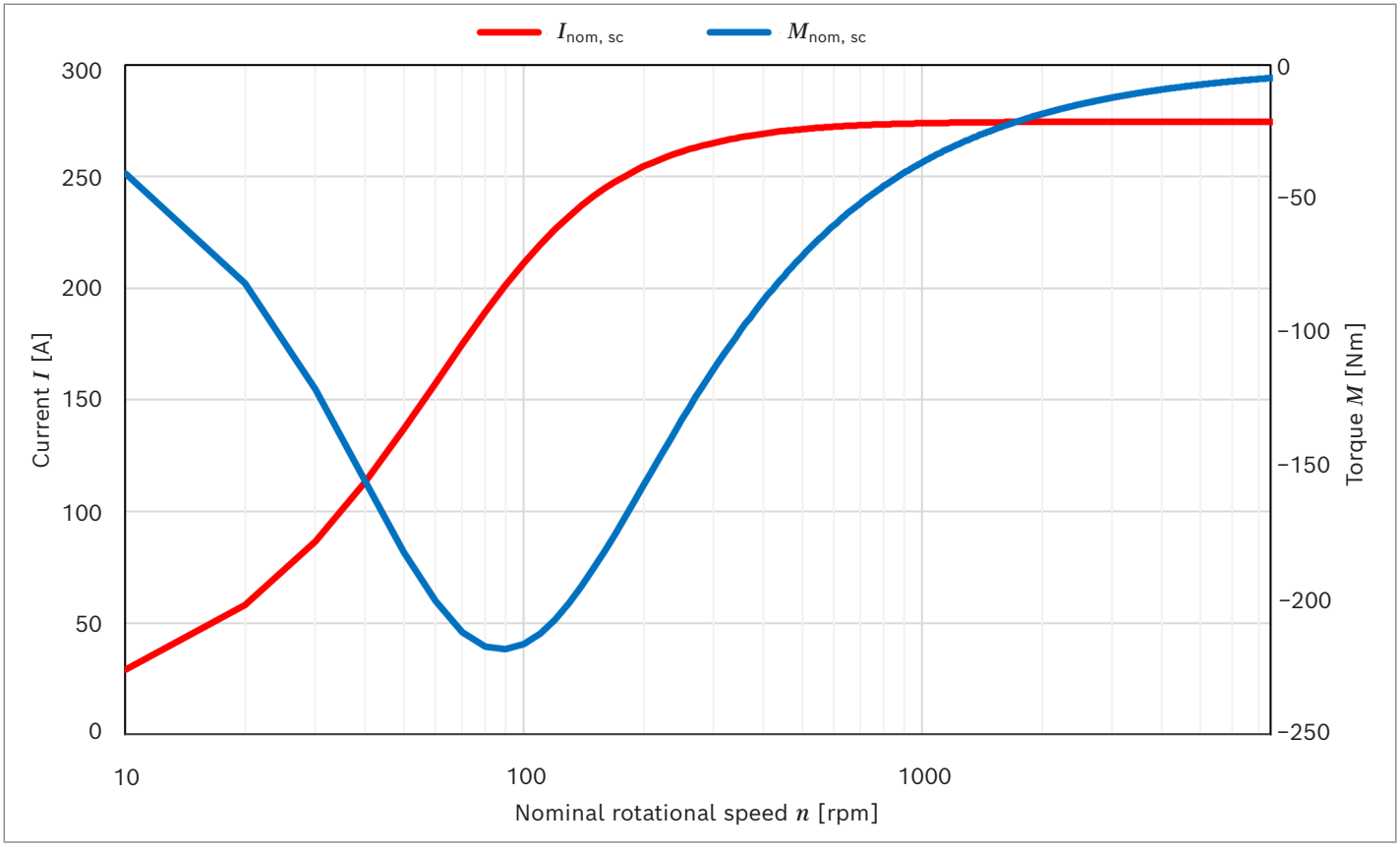

EMP1-13L20

Designation	Symbol	Unit	Value
S1 continuous torque at 200 rpm	$M_{S1,\ low\ rotational\ speed}$	Nm	421
S1 continuous current at 200 rpm	$I_{S1,\ low\ rotational\ speed}$	A_{RMS}	141
Nominal rotational speed	n_{nom}	rpm	2000
S1 continuous torque at n_{nom}	$M_{S1,\ nnom}$	Nm	401
S1 continuous current at n_{nom}	$I_{S1,\ nnom}$	A_{RMS}	137
S1 continuous power at n_{nom}	$P_{S1,\ nnom}$	kW	84
S1 continuous efficiency at n_{nom}	$\eta_{S1,\ nnom}$	%	93.91
S2 for 60s torque (maximum torque)[1]	$M_{S2,\ 60\ s}$	Nm	1007
S2 for 60s current (maximum current)[1]	$I_{S2,\ 60\ s}$	A_{RMS}	519
S2 for 60s power (maximum power)[1]	$P_{S2,\ 60\ s}$	kW	145
Maximum rotational speed	n_{max}	rpm	10500
S1 continuous torque at n_{max}	$M_{S1,\ nmax}$	Nm	0
S1 continuous current at n_{max}	$I_{S1,\ nmax}$	A_{RMS}	21
S1 continuous power at n_{max}	$P_{S1,\ max}$	kW	0
S1 continuous efficiency at n_{max}	$\eta_{S1,\ nmax}$	%	0.00
S1 continuous torque at $P_{S1,\ max}$	$M_{S1,\ Pmax}$	Nm	260
S1 continuous current at $P_{S1,\ max}$	$I_{S1,\ Pmax}$	A_{RMS}	133
S1 continuous power at $P_{S1,\ max}$	$P_{S1,\ Pmax}$	kW	100
S1 continuous speed at $P_{S1,\ max}$	$n_{S1,\ Pmax}$	%	3675
S1 continuous efficiency at $P_{S1,\ max}$	$\eta_{S1,\ Pmax}$	%	94.56
Short circuit braking torque at nominal rotational speed[2]	$M_{nom,\ sc}$	Nm	21
Short circuit current at nominal speed[2]	$I_{nom,\ sc}$	A_{RMS}	165
Maximum short circuit braking torque[2]	$M_{max,\ sc}$	Nm	263
Maximum short circuit current[2]	$I_{max,\ sc}$	A_{RMS}	165
DC supply voltage	V_{DC}	V	700
Voltage for motor phases (outer conductor-outer conductor – RMS)	V_{LL}	V_{RMS}	475

Electric	Symbol	Unit	Value
Number of poles			8
Phase-phase voltage constant at 20 °C	k_{EMK}	V_{RMS} / 1000 rpm	169.09
Torque constant at 25 °C	k_T	Nm / A_{RMS}	3.22
Synchronous inductance (d-axis) at rated current	L_d	mH	1.28
Synchronous inductance (q-axis) at rated current	L_q	mH	2.69
Stator winding resistance (phase) at 20 °C	R_{LL}	Ω	0.1069
Cogging torque (unskewed)	M_{cog}	Nm	21.23
Torque ripple	$M_{Pk\text{-}Pk}$	Nm	45.72

1) For the S2 calculation, the starting temperature of the components is assumed to be 25 °C.
2) Magnet temperature at 20 °C

▼ **Torque EMP1-13L20**

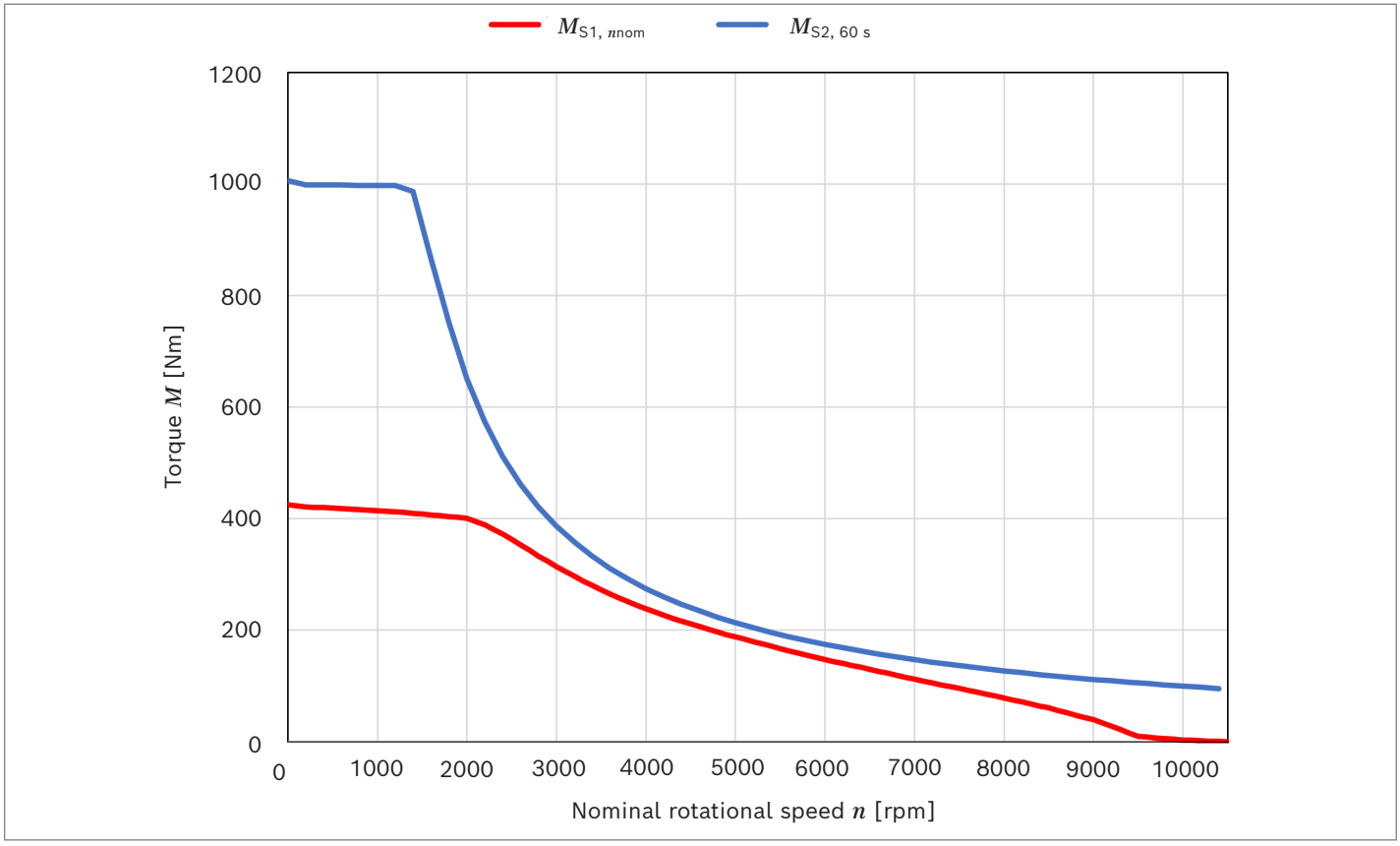

▼ **Power EMP1-13L20**

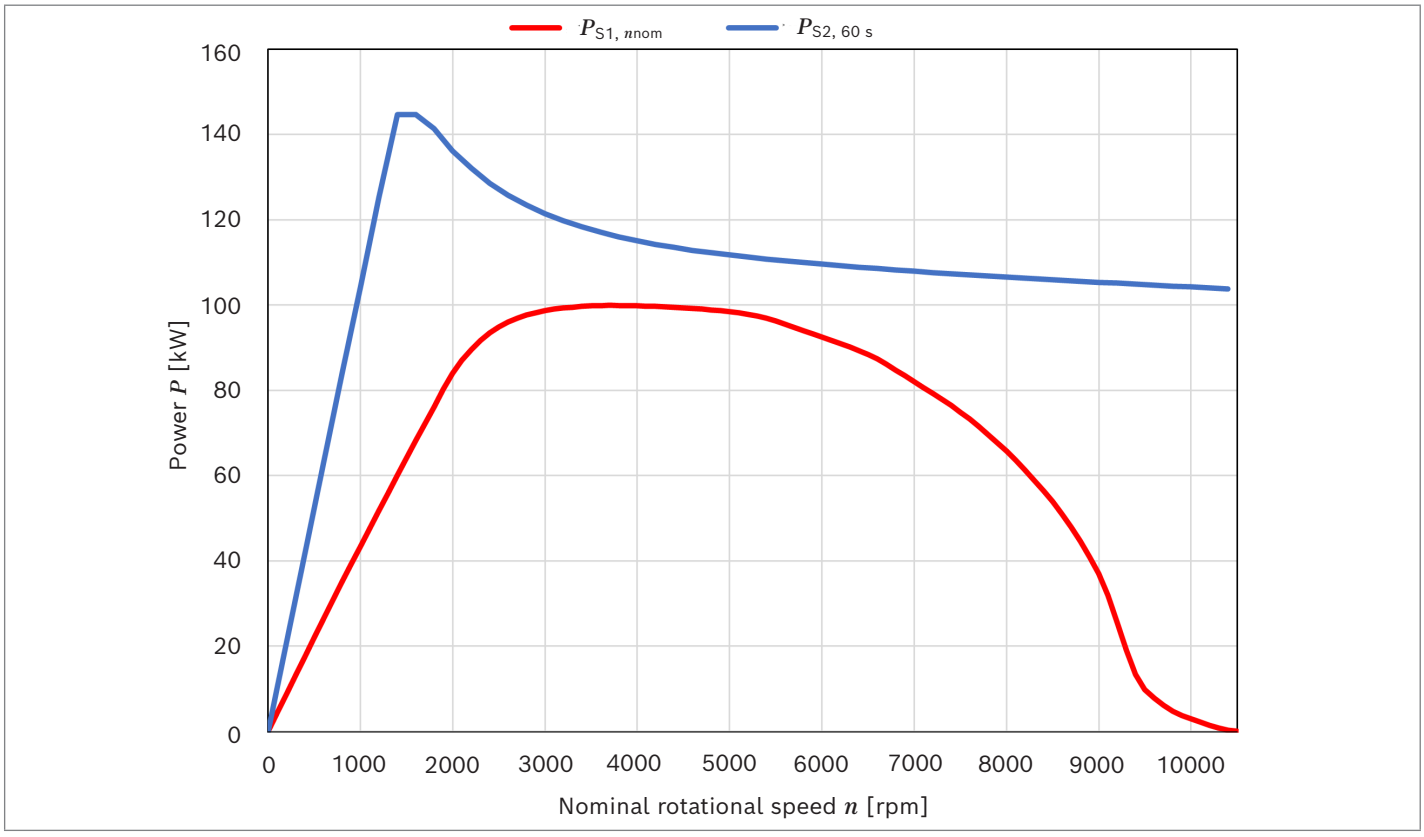

▼ **Short circuit current and short circuit braking torque EMP1-13L20**

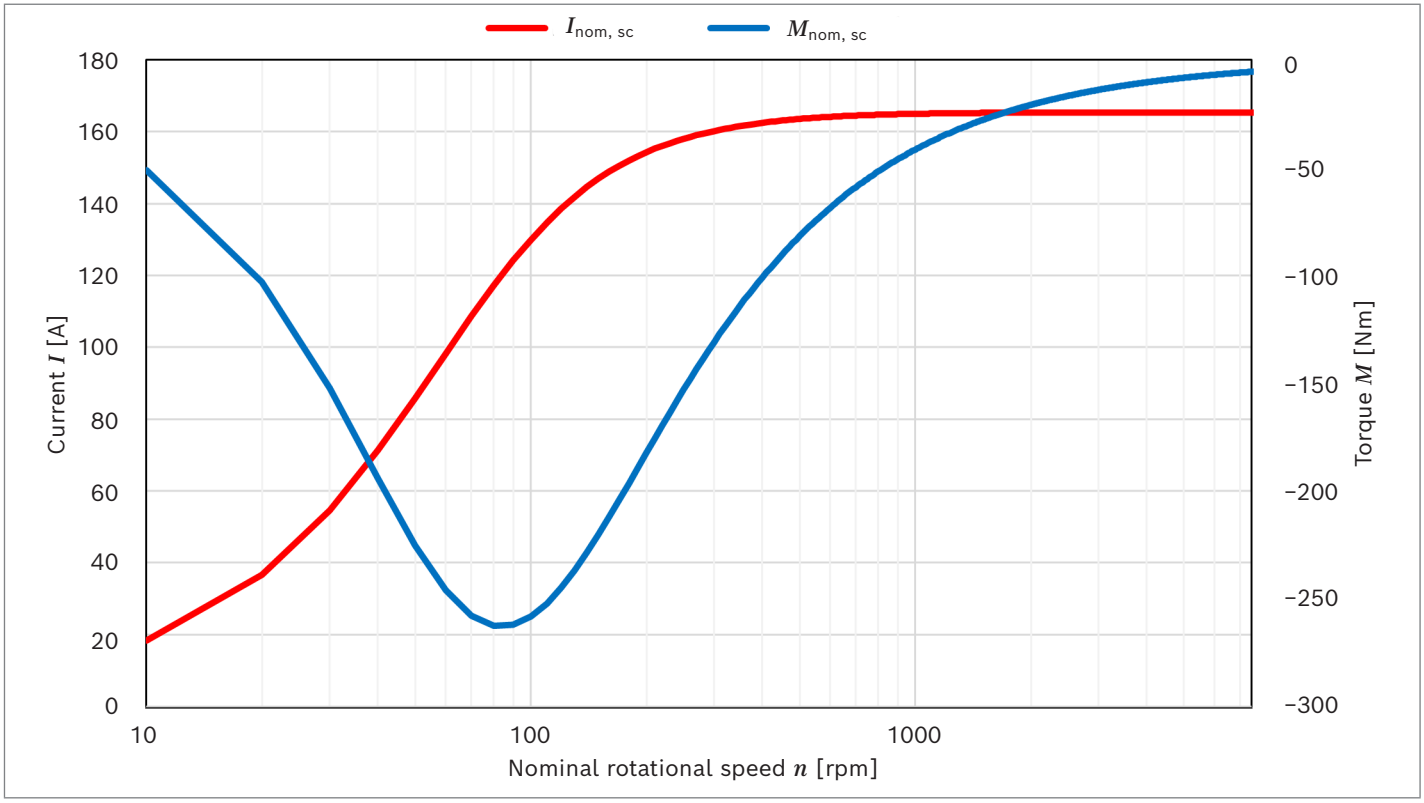

EMP1-13L30

Designation	Symbol	Unit	Value
S1 continuous torque at 200 rpm	$M_{S1,\ low\ rotational\ speed}$	Nm	417
S1 continuous current at 200 rpm	$I_{S1,\ low\ rotational\ speed}$	A_{RMS}	200
Nominal rotational speed	n_{nom}	rpm	3000
S1 continuous torque at n_{nom}	$M_{S1,\ nnom}$	Nm	376
S1 continuous current at n_{nom}	$I_{S1,\ nnom}$	A_{RMS}	186
S1 continuous power at n_{nom}	$P_{S1,\ nnom}$	kW	118
S1 continuous efficiency at n_{nom}	$\eta_{S1,\ nnom}$	%	95.32
S2 for 60s torque (maximum torque)[1]	$M_{S2,\ 60\ s}$	Nm	1008
S2 for 60s current (maximum current)[1]	$I_{S2,\ 60\ s}$	A_{RMS}	743
S2 for 60s power (maximum power)[1]	$P_{S2,\ 60\ s}$	kW	209
Maximum rotational speed	n_{max}	rpm	10500
S1 continuous torque at n_{max}	$M_{S1,\ nmax}$	Nm	12
S1 continuous current at n_{max}	$I_{S1,\ nmax}$	A_{RMS}	26
S1 continuous power at n_{max}	$P_{S1,\ max}$	kW	13
S1 continuous efficiency at n_{max}	$\eta_{S1,\ nmax}$	%	22.51
S1 continuous torque at $P_{S1,\ max}$	$M_{S1,\ Pmax}$	Nm	275
S1 continuous current at $P_{S1,\ max}$	$I_{S1,\ Pmax}$	A_{RMS}	177
S1 continuous power at $P_{S1,\ max}$	$P_{S1,\ Pmax}$	kW	133
S1 continuous speed at $P_{S1,\ max}$	$n_{S1,\ Pmax}$	%	4620
S1 continuous efficiency at $P_{S1,\ max}$	$\eta_{S1,\ Pmax}$	%	95.62
Short circuit braking torque at nominal rotational speed[2]	$M_{nom,\ sc}$	Nm	14
Short circuit current at nominal speed[2]	$I_{nom,\ sc}$	A_{RMS}	236
Maximum short circuit braking torque[2]	$M_{max,\ sc}$	Nm	263
Maximum short circuit current[2]	$I_{max,\ sc}$	A_{RMS}	236
DC supply voltage	V_{DC}	V	700
Voltage for motor phases (outer conductor-outer conductor – RMS)	V_{LL}	V_{RMS}	475

Electric	Symbol	Unit	Value
Number of poles			8
Phase-phase voltage constant at 20 °C	k_{EMK}	V_{RMS} / 1000 rpm	119
Torque constant at 25 °C	k_T	Nm / A_{RMS}	2.1
Synchronous inductance (d-axis) at rated current	L_d	mH	0.55
Synchronous inductance (q-axis) at rated current	L_q	mH	1.32
Stator winding resistance (phase) at 20 °C	R_{LL}	Ω	0.0517
Cogging torque (unskewed)	M_{cog}	Nm	21.23
Torque ripple	$M_{Pk\text{-}Pk}$	Nm	45.03

1) For the S2 calculation, the starting temperature of the components is assumed to be 25 °C.
2) Magnet temperature at 20 °C

▼ **Torque EMP1-13L30**

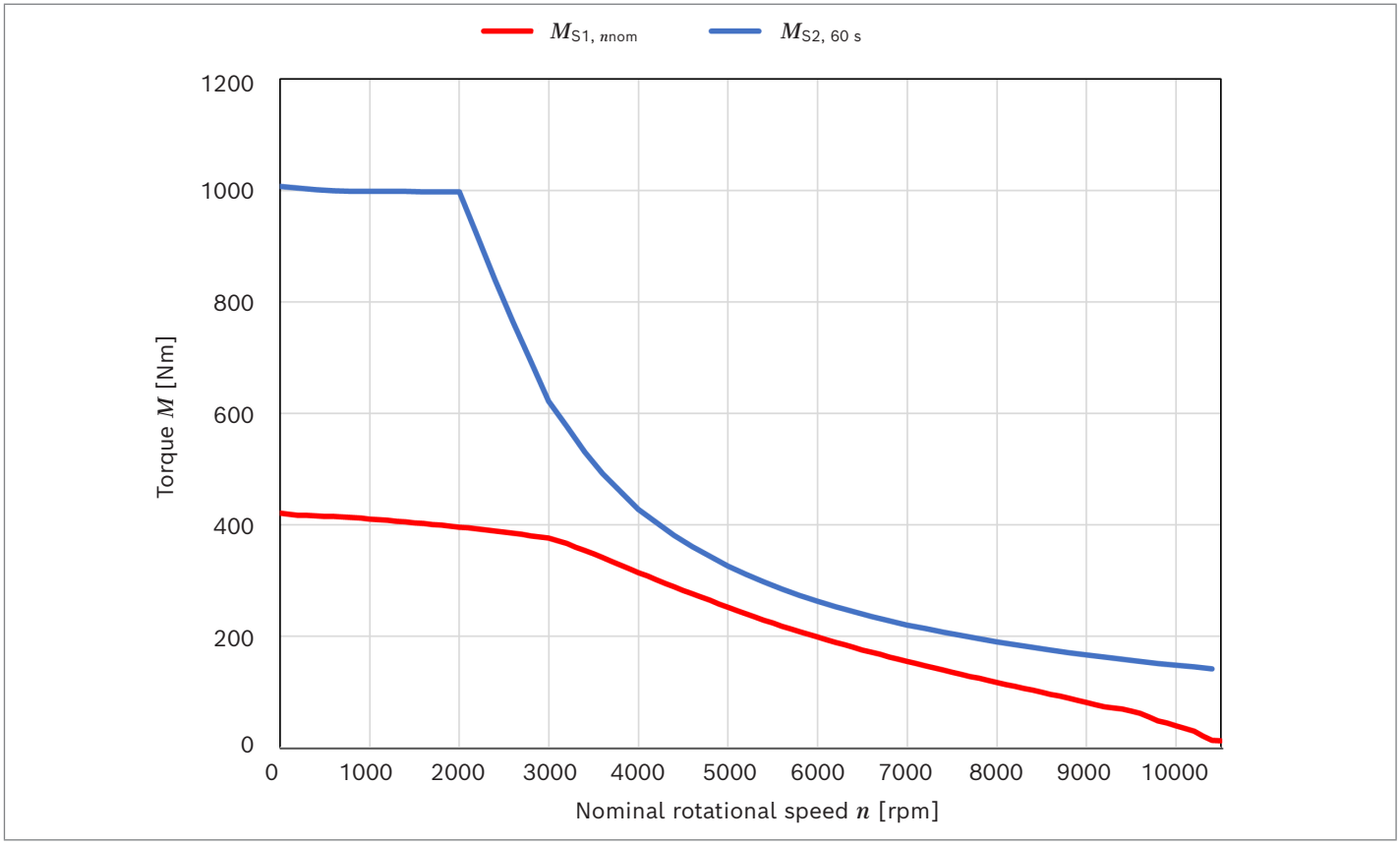

▼ **Power EMP1-13L30**

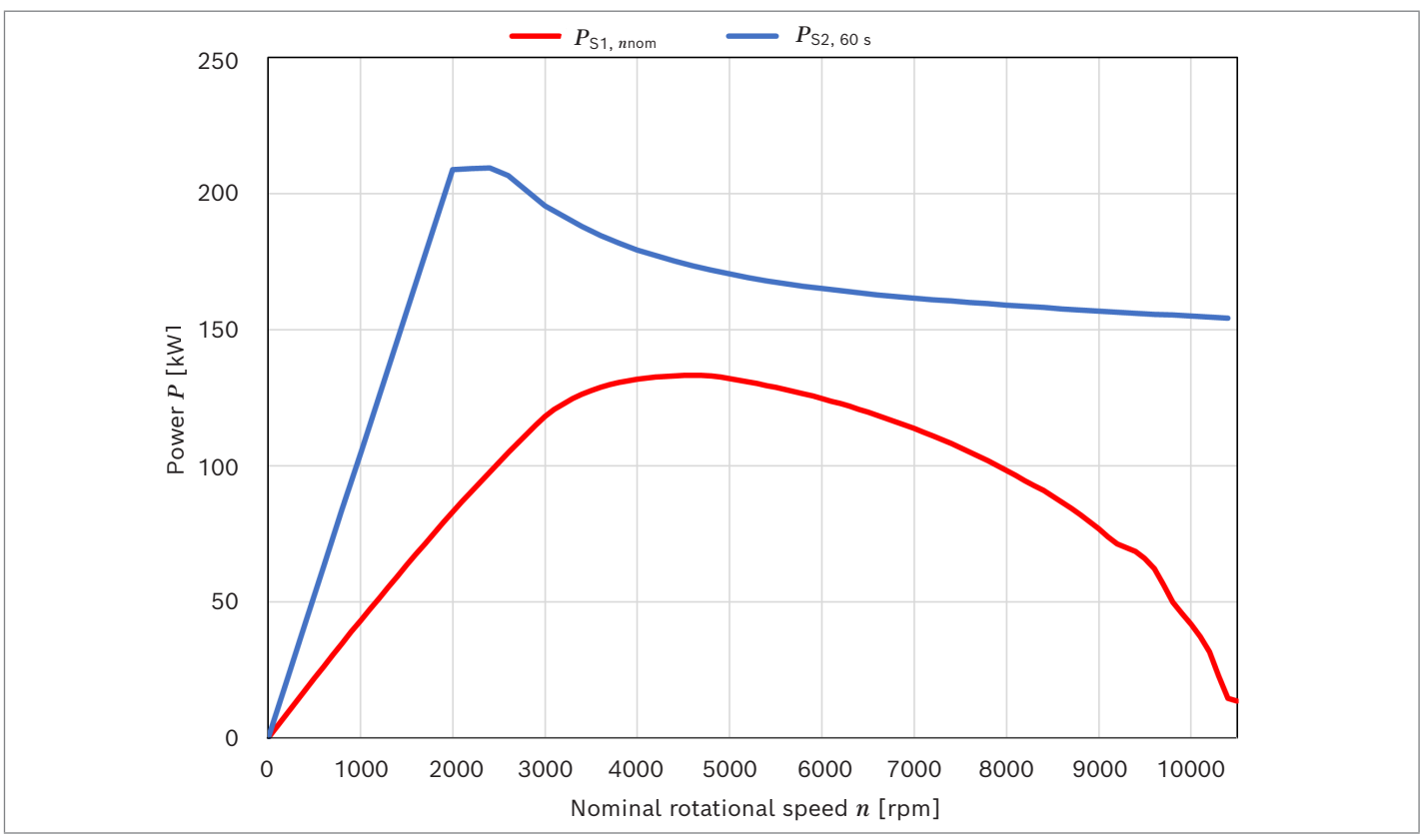

▼ **Short circuit current and short circuit braking torque EMP1-13L30**

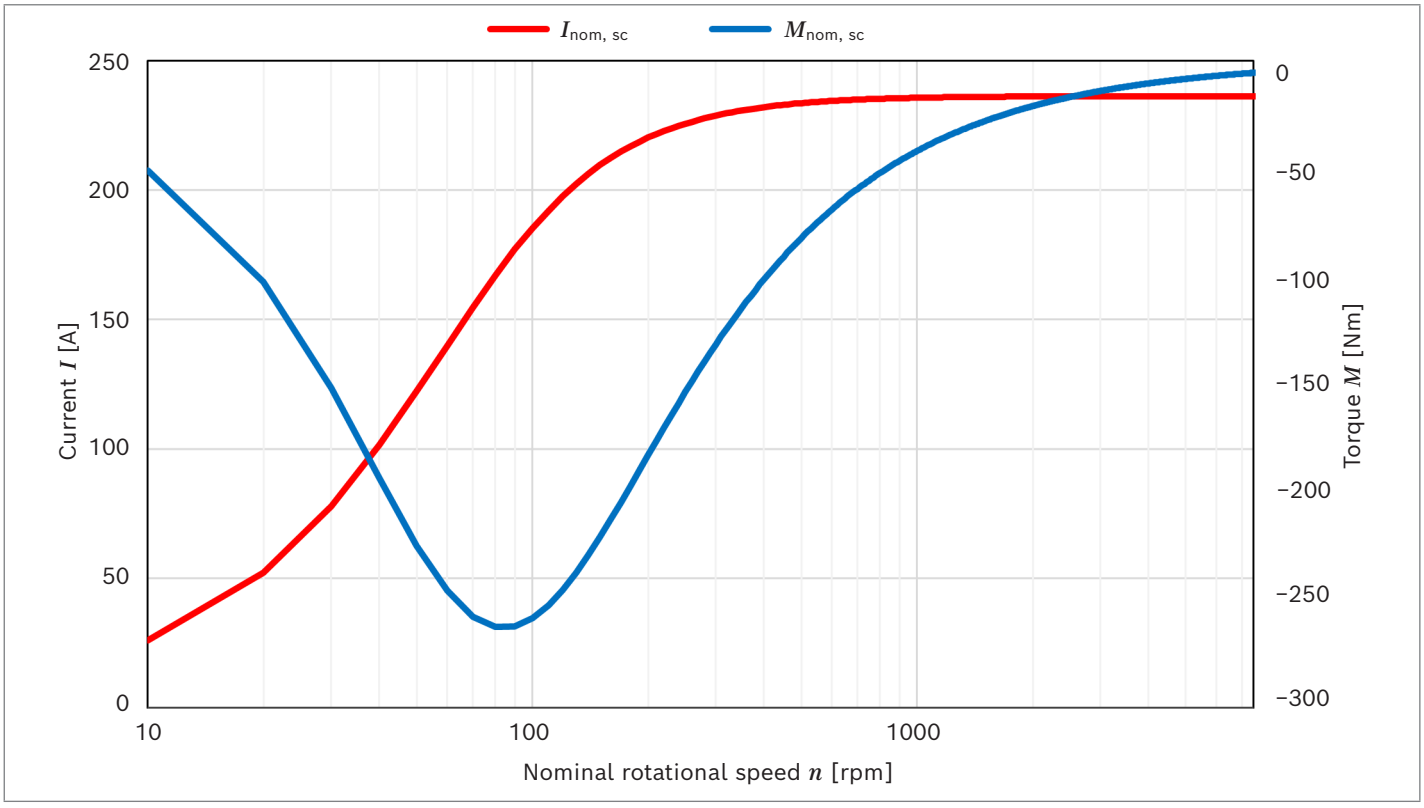

EMP1-13L40

Designation	Symbol	Unit	Value
S1 continuous torque at 200 rpm	$M_{S1,\ low\ rotational\ speed}$	Nm	421
S1 continuous current at 200 rpm	$I_{S1,\ low\ rotational\ speed}$	A_{RMS}	282
Nominal rotational speed	n_{nom}	rpm	4000
S1 continuous torque at n_{nom}	$M_{S1,\ nnom}$	Nm	364
S1 continuous current at n_{nom}	$I_{S1,\ nnom}$	A_{RMS}	251
S1 continuous power at n_{nom}	$P_{S1,\ nnom}$	kW	152
S1 continuous efficiency at n_{nom}	$\eta_{S1,\ nnom}$	%	96.07
S2 for 60s torque (maximum torque)[1]	$M_{S2,\ 60\ s}$	Nm	1007
S2 for 60s current (maximum current)[1]	$I_{S2,\ 60\ s}$	A_{RMS}	1037
S2 for 60s power (maximum power)[1]	$P_{S2,\ 60\ s}$	kW	300
Maximum rotational speed	n_{max}	rpm	10500
S1 continuous torque at n_{max}	$M_{S1,\ nmax}$	Nm	91
S1 continuous current at n_{max}	$I_{S1,\ nmax}$	A_{RMS}	150
S1 continuous power at n_{max}	$P_{S1,\ max}$	kW	100
S1 continuous efficiency at n_{max}	$\eta_{S1,\ nmax}$	%	94.30
S1 continuous torque at $P_{S1,\ max}$	$M_{S1,\ Pmax}$	Nm	299
S1 continuous current at $P_{S1,\ max}$	$I_{S1,\ Pmax}$	A_{RMS}	229
S1 continuous power at $P_{S1,\ max}$	$P_{S1,\ Pmax}$	kW	168
S1 continuous speed at $P_{S1,\ max}$	$n_{S1,\ Pmax}$	%	5355
S1 continuous efficiency at $P_{S1,\ max}$	$\eta_{S1,\ Pmax}$	%	96.52
Short circuit braking torque at nominal rotational speed[2]	$M_{nom,\ sc}$	Nm	10
Short circuit current at nominal speed[2]	$I_{nom,\ sc}$	A_{RMS}	331
Maximum short circuit braking torque[2]	$M_{max,\ sc}$	Nm	263
Maximum short circuit current[2]	$I_{max,\ sc}$	A_{RMS}	331
DC supply voltage	V_{DC}	V	700
Voltage for motor phases (outer conductor-outer conductor – RMS)	V_{LL}	V_{RMS}	475

Electric	Symbol	Unit	Value
Number of poles			8
Phase-phase voltage constant at 20 °C	k_{EMK}	V_{RMS} / 1000 rpm	85
Torque constant at 25 °C	k_T	Nm / A_{RMS}	1.53
Synchronous inductance (d-axis) at rated current	L_d	mH	0.34
Synchronous inductance (q-axis) at rated current	L_q	mH	0.75
Stator winding resistance (phase) at 20 °C	R_{LL}	Ω	0.0264
Cogging torque (unskewed)	M_{cog}	Nm	21.23
Torque ripple	$M_{Pk\text{-}Pk}$	Nm	44.58

1) For the S2 calculation, the starting temperature of the components is assumed to be 25 °C.
2) Magnet temperature at 20 °C

▼ **Torque EMP1-13L40**

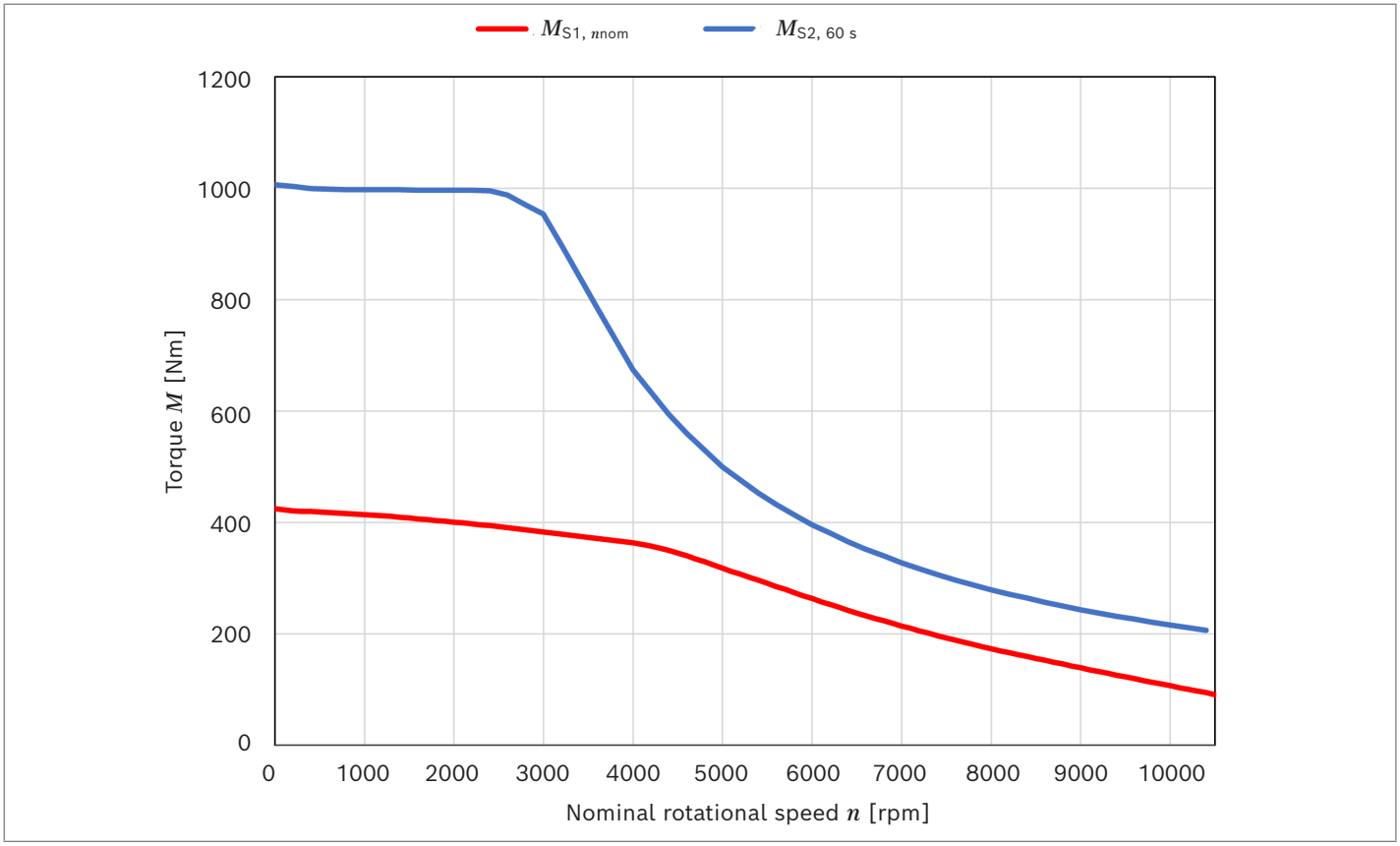

▼ **Power EMP1-13L40**

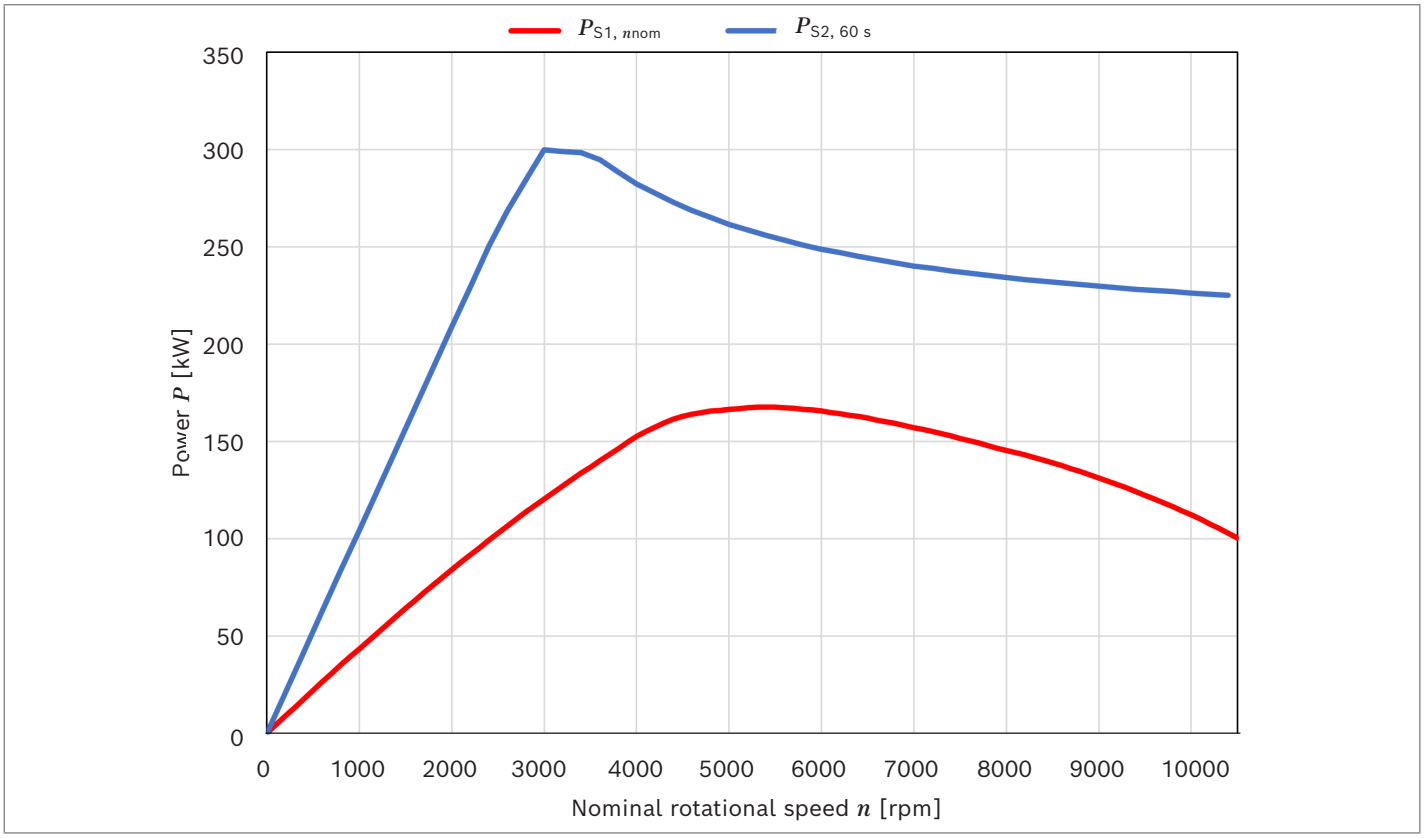

▼ **Short circuit current and short circuit braking torque EMP1-13L40**

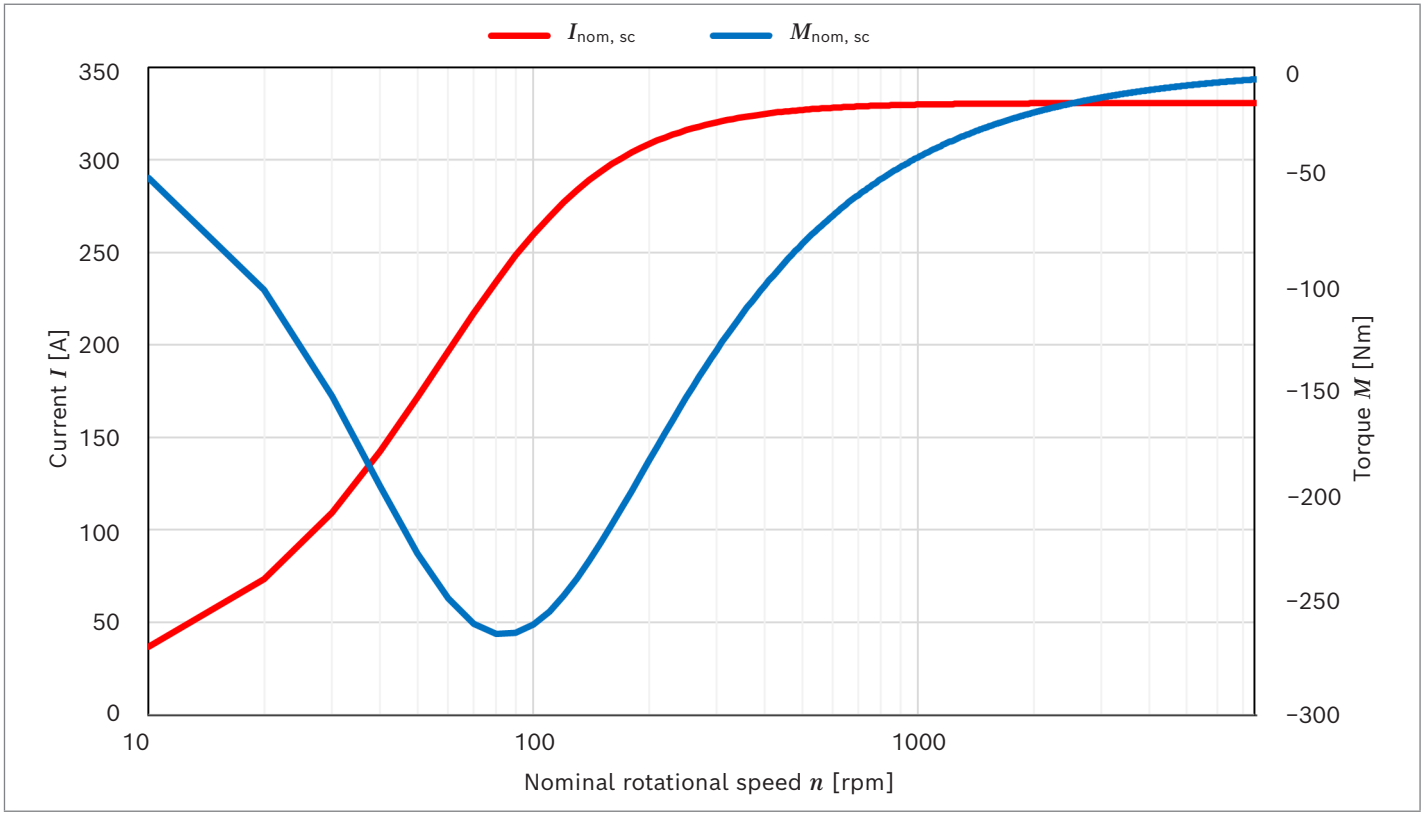

Sensors

Resolver

The built-in resolver detects the position of the rotor. This position is used by the corresponding inverter to calculate the motor rotational speed and to correctly set the stator currents.

Parameter	Unit	EMP1-13
Ambient temperature	°C	−40 ... 150
Storage temperature	°C	−40 ... 80
Excitation voltage	V_{RMS}	7
Excitation frequency	kHz	10
Ohmic output load (symmetrical)	kΩ	450
Output capacitance	µF	100
Polarity		3 poles
Gear ratio		0.286 ±10%
Input impedance at 10 kHz, 7 V_{RMS}	Ω	75 ±12%
Angle error range		<120 arc minutes (degrees)
Phase shift	°	±15
Maximum operating speed	rpm	20000

Temperature sensor

The eLION motors have two PT1000 temperature sensors for thermal protection. One PT1000 is used to measure the stator winding temperature and the second PT1000 is used to measure the inlet temperature of the cooling liquid.

Notice

Due to their thermal inertia, the sensors are not able to follow rapid changes in the winding temperature. In this case, please note the maximum permissible current and the thermal motor model of the inverter EDS1.

▼ **PT1000 characteristics**

With the PT1000 temperature sensors, the temperature of the winding and the cooling liquid can be constantly monitored. We recommend setting the winding warning temperature to 145 °C and the switch-off temperature to 175 °C.

Type	Unit	S2
Sensor		PT1000
Measuring range	°C	0 ... 200
R_0	Ω	1000
Temperature tolerance	K	±5 (B)
Recommended measuring current	mA	< 1
Dielectric insulation strength	kV	2

▼ **Resistance table PT1000**

Temperature [°C]	R [Ω]
0	1000
25	1097
50	1194
75	1290
100	1385
125	1480
150	1573
175	1666
200	1759

▼ **Resistance characteristic curve PT1000**

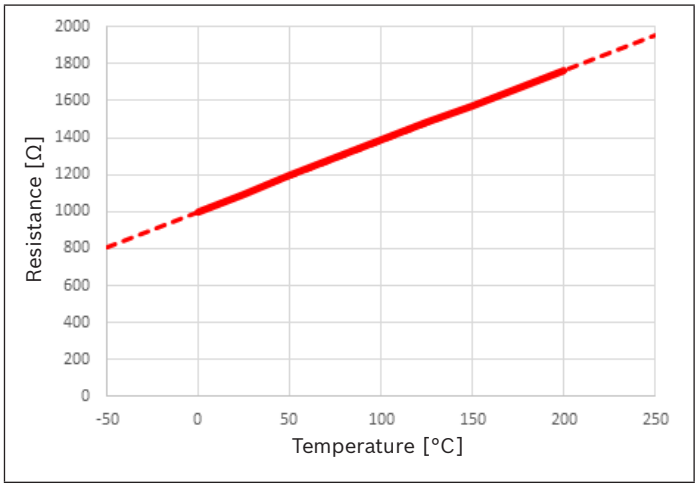

Electrical connections

Terminal box

See operating instructions 96709-01-B

XG23, LV motor encoder and temperature connector

See operating instructions 96709-01-B

Operating ranges and characteristic curves

▼ **Motor operating ranges (EM)**

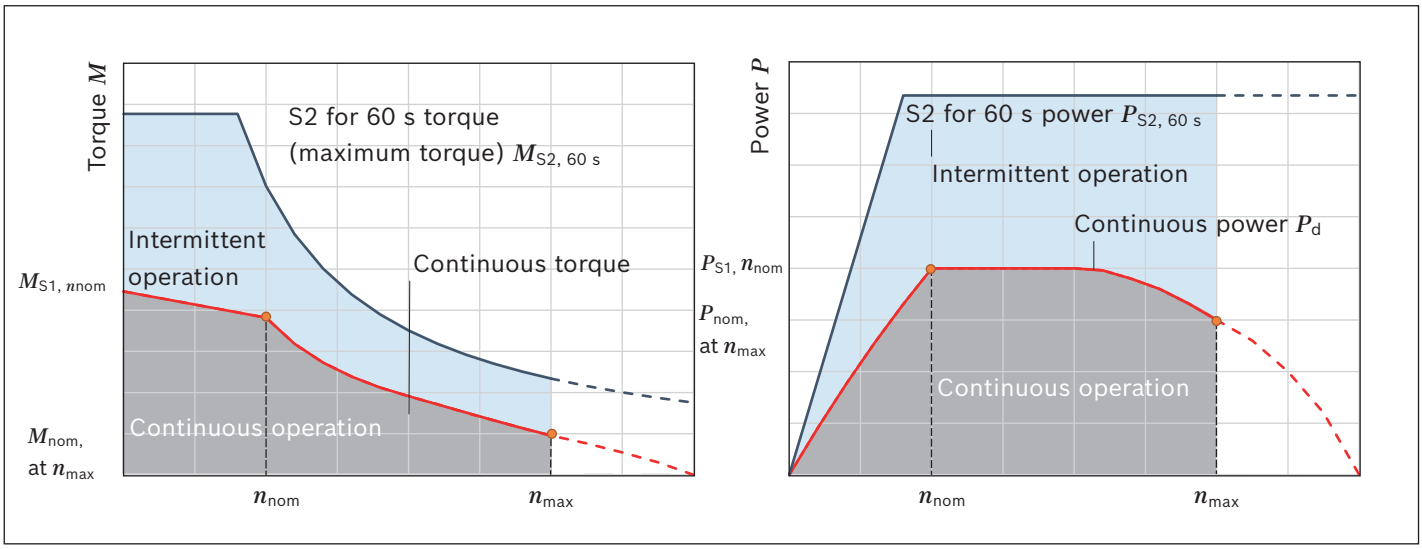

- S1 continuous torque $M_{S1,\,nnom}$ [Nm]:
  Continuous torque available at nominal rotational speed n_{nom} and a cooling liquid inlet temperature of 65 °C.
- Operating modes:
  The operating modes of electric motor generators are defined according to VDE 0530 "Rules for motor generators". Operation includes the specification of the motor generator load including duration, sequence and, if applicable, starting, electrical braking, idling, and interruptions.
  - S1 (continuous operation according to DIN EN 60034-1):
    Operation under constant load, the duration of which is sufficient to achieve the thermally stationary state.
  - S3 (periodic intermittent operation according to DIN 60034-1):
    Periodic intermittent operation comprises a sequence of similar cycles at constant nominal load and standstill period. The start-up current has no measurable effect on the temperature increase. The relative duty cycle is equal to the load time divided by (load time plus standstill period) multiplied by 100%.
  - Continuous operation:
    Operation under constant load. In this mode, the motor generator does not reach the thermally stationary state. The torque and power are therefore lower than in S1 operation, as a temporary overload reserve is maintained.
  - Intermittent operation
    Operating points that cause damage and excessive wear in the long term, and are therefore limited in their permissible duration.
- Continuous torque:
  Torque that is constantly available (see "Continuous operation").
- S2 for 60 s torque $M_{S2,\,60\,s}$ [Nm]:
  Temporary maximum torque applied at operating temperature with nominal load. $M_{S2,\,60\,s}$ is defined according to ECE R85 with a component start-up temperature of 25 °C and a coolant inlet temperature of 65 °C. After that, the machine can only be operated with a torque that is not above the continuous torque. If a torque higher than the continuous torque is requested again, the motor load must be lower than the continuous torque to allow the motor to cool down. The lower the load on the motor, the shorter the cooling time. This limitation is for thermal reasons.
- Maximum rotational speed n_{max} [rpm]:
  Maximum mechanically permissible rotational speed of the motor. Limiting factors for EMS1 motors are the maximum permissible bearing speeds to maintain the service life of the motor.
- Nominal rotational speed n_{nom} [rpm]:
  Rotational speed specified by the manufacturer for the specifications of the nominal data on the name plate. The rotational speed is achieved at a DC voltage of 700 V.

Dimensions

▼ **EMP1-13 with single connector, external spline shaft W40×2×18×9d, motor flange SAE 5 (variant W2M5)**

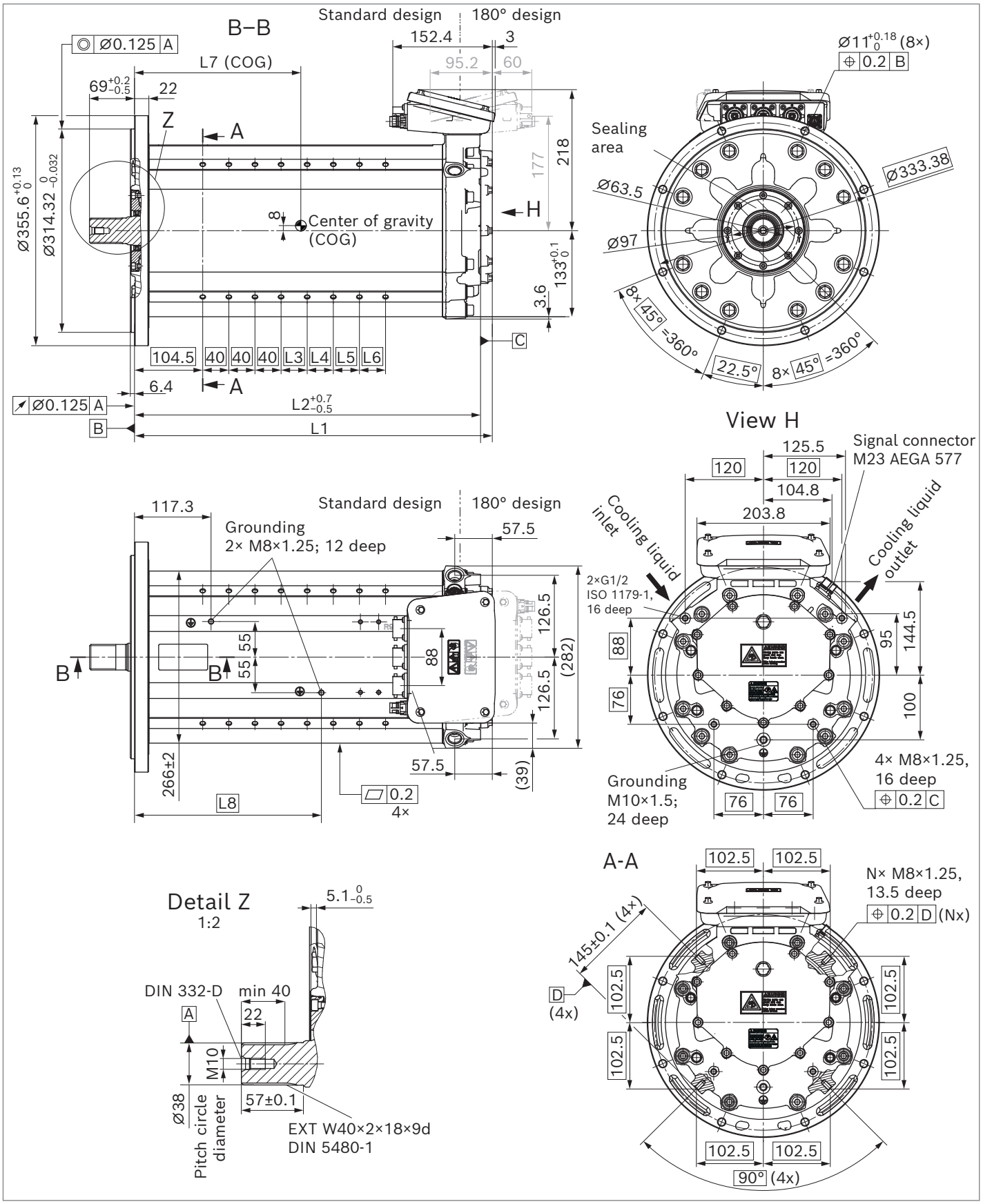

180° design
Single connector C3
U.V.W. motor output for downward angled or straight connection in B-shield direction
– XXC3 –
U – V – W

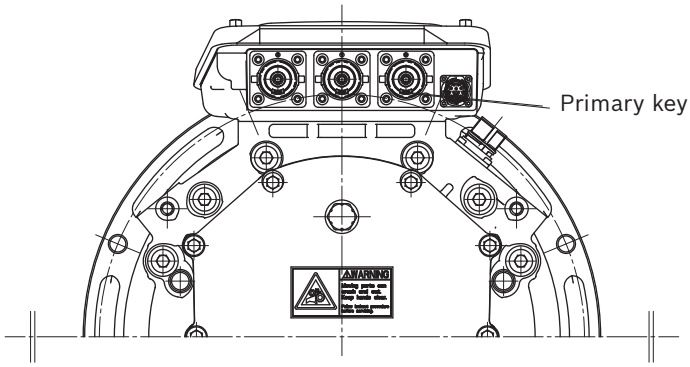

180° design
Single connector C4
U.V.W. motor output for upward angled connection in B-shield direction
– XXC4 –
U – V – W

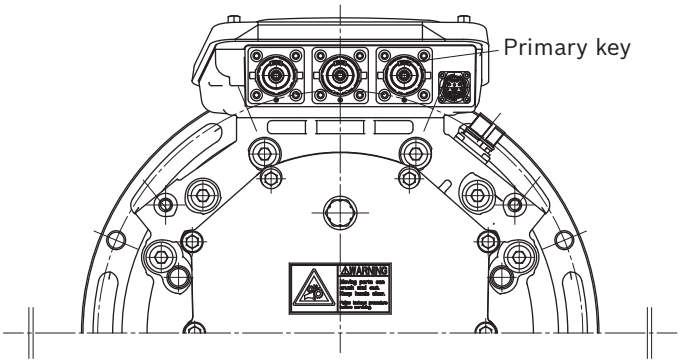

Standard design
Single connector C1
W.V.U. motor output for straight connection in A-shield direction
– XXC1 –
W – V – U

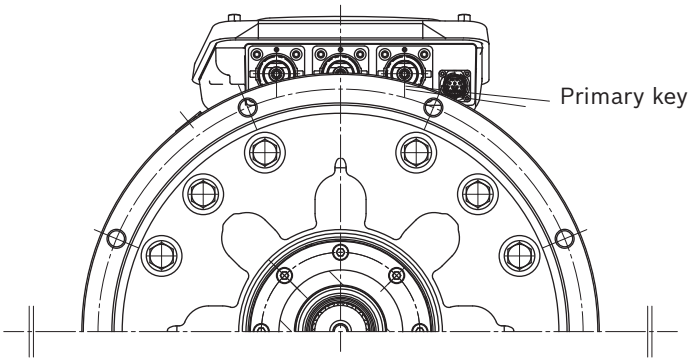

Standard design
Single connector C2
W.V.U. motor output for upward angled connection in A-shield direction
– XXC2 –
W – V – U

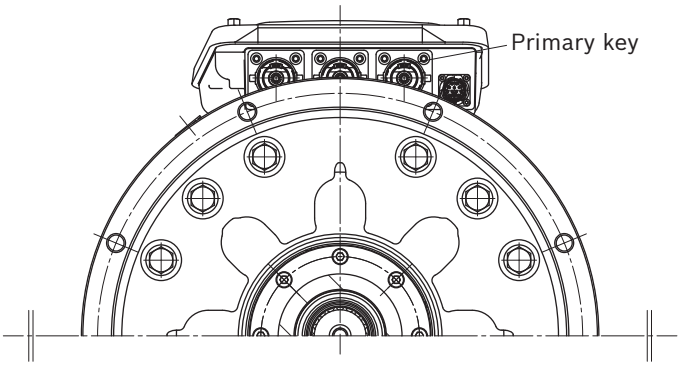

	L1	L2	L3	L4	L5	L6	L7	L8	N	m
EMP1–13F–XX–CX–W2M5	398	380	–	–	–	–	173	136.3	16	98 kg
EMP1–13H–XX–CX–W2M5	448	430	40	–	–	–	198	186.3	20	115 kg
EMP1–13J–XX–CX–W2M5	498	480	40	40	–	–	224	236.3	24	126 kg
EMP1–13L–XX–CX–W2M5	548	530	40	40	40	40	250	286.3	32	139 kg

▼ **EMP1-13 with terminal box, internal splined shaft N1/4 14T 12/24 DP, pump flange 127-2 (C) 45° steps, (variant N2P3)**

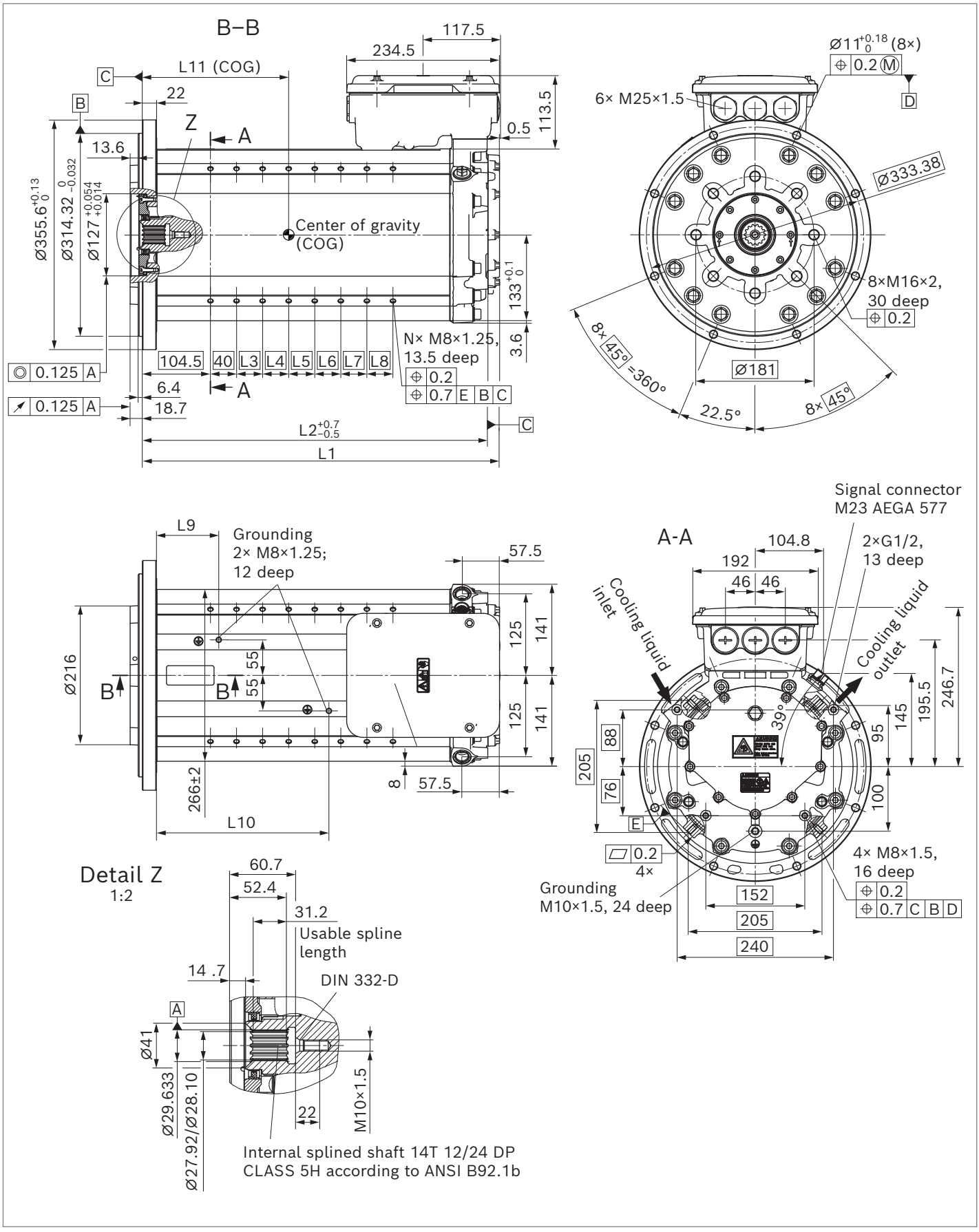

	L1	L2	L3	L4	L5	L6	L7	L8	L9	L10	L11	N	m
EMP1–13D–XX–RSAB–N2P3	348	330	–	–	–	–	–	–	77.5	77.5	148.8	8	86 kg
EMP1–13F–XX–RSAB–N2P3	398	380	40	40	–	–	–	–	95.5	114.5	174.0	16	100 kg
EMP1–13H–XX–RSAB–N2P3	448	430	40	40	40	40	–	–	95.5	164.5	198.9	20	114 kg
EMP1–13J–XX–RSAB–N2P3	498	480	40	40	40	40	40	–	95.5	214.5	223.9	24	128 kg
EMP1–13L–XX–RSAB–N2P3	548	530	40	40	40	40	40	40	95.5	264.5	248.9	32	142 kg

▼ **EMP1-13 with single connector, internal splined shaft N1/4 14T 12/24 DP, pump flange 127-2 (C) 45° steps, (variant N2P3)**

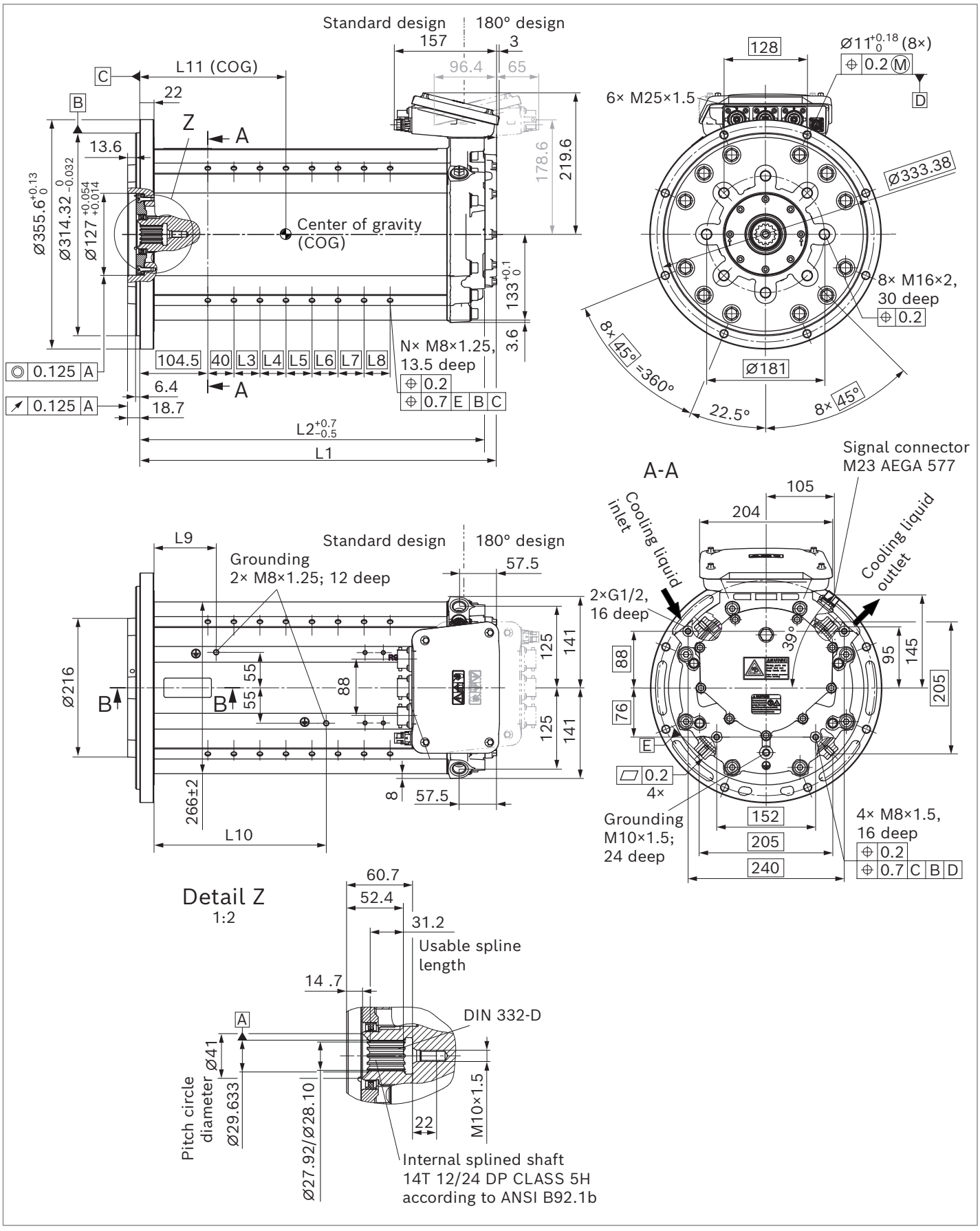

180° design
Single connector C3
U.V.W. motor output for downward angled or straight connection in B-shield direction
– XXC3 –
U – V – W

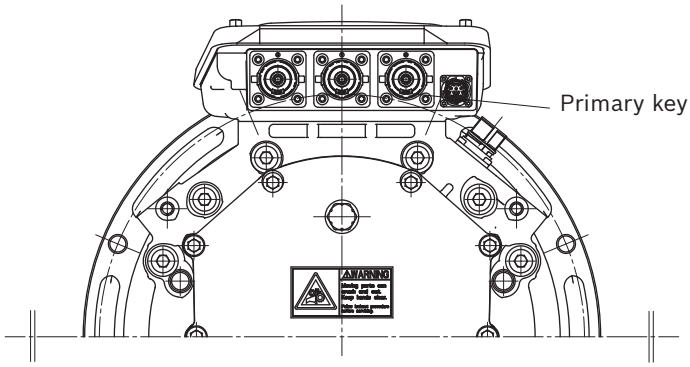

180° design
Single connector C4
U.V.W. motor output for upward angled connection in B-shield direction
– XXC4 –
U – V – W

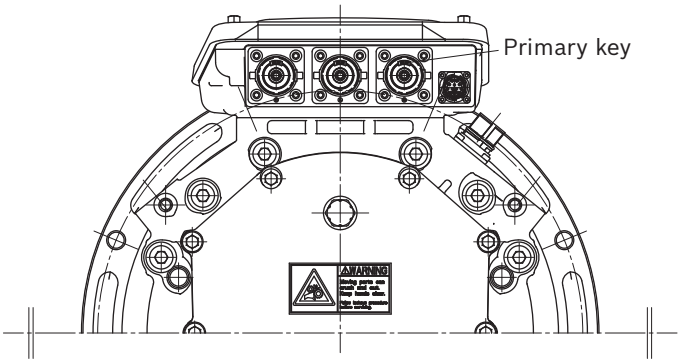

Standard design
Single connector C1
W.V.U. motor output for straight connection in A-shield direction
– XXC1 –
W – V – U

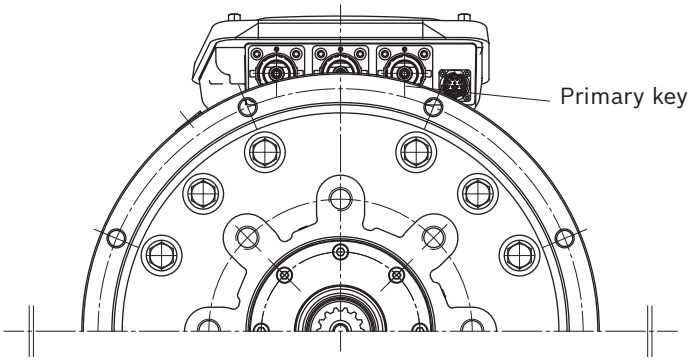

Standard design
Single connector C2
W.V.U. motor output for upward angled connection in A-shield direction
– XXC2 –
W – V – U

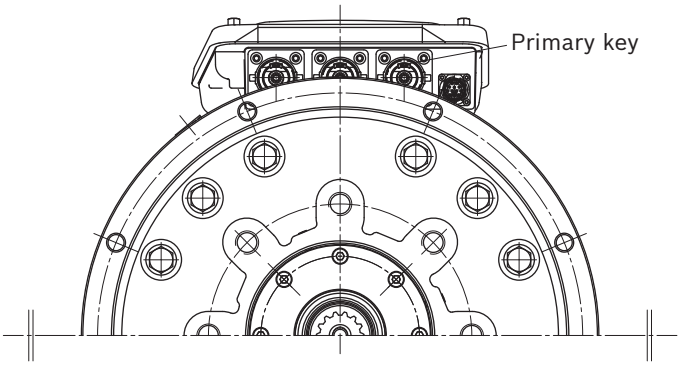

	L1	L2	L3	L4	L5	L6	L7	L8	L9	L10	L10	N	m
EMP1–13D–XX–CX–N2P3	348	330	–	–	–	–	–	–	77.5	77.5	151.6	8	87 kg
EMP1–13F–XX–CX–N2P3	398	380	40	40	–	–	–	–	95.5	114.5	176.6	16	101 kg
EMP1–13H–XX–CX–N2P3	448	430	40	40	40	40	–	–	95.5	164.5	201.9	20	115 kg
EMP1–13J–XX–CX–N2P3	498	480	40	40	40	40	40	–	95.5	214.5	227.0	24	129 kg
EMP1–13L–XX–CX–N2P3	548	530	40	40	40	40	40	40	95.5	264.5	252.2	32	143 kg

▼ **EMS1-13 with single connector, internal splined shaft 14T 12/24 DP, pump flange 127-4 (C) (45° steps, variant N2P4)**

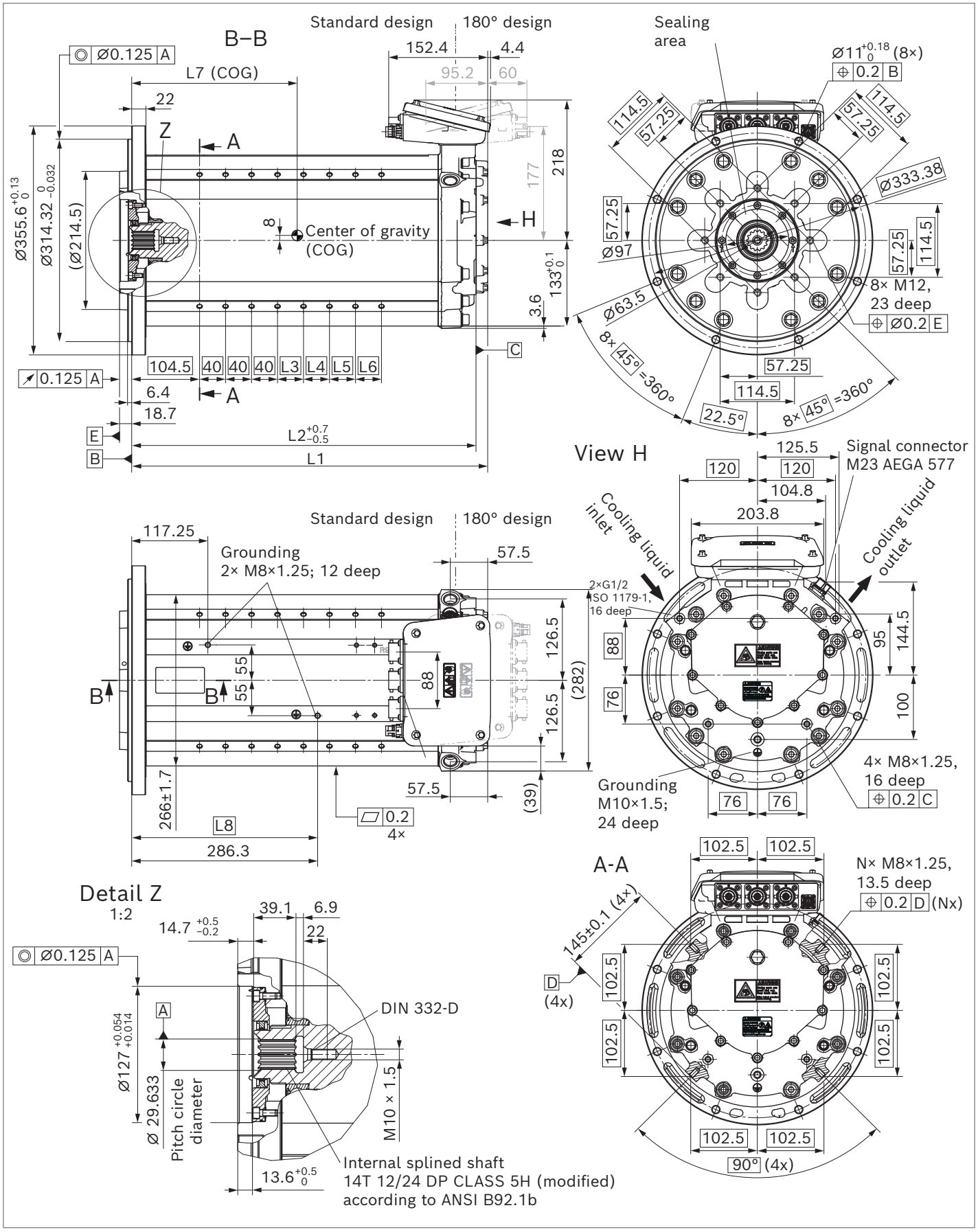

180° design
Single connector C3
U.V.W. motor output for downward angled or straight connection in B-shield direction
– XXC3 –
U – V – W

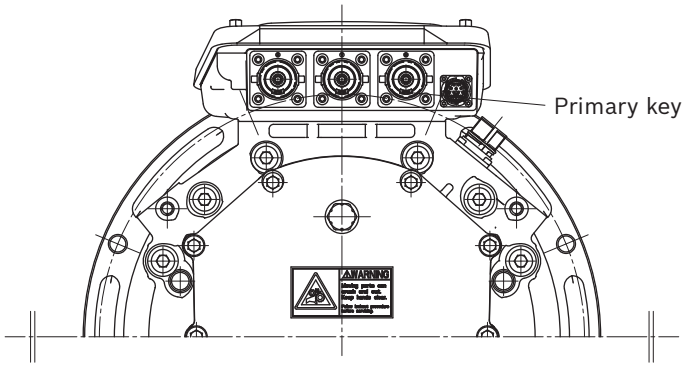

180° design
Single connector C4
U.V.W. motor output for upward angled connection in B-shield direction
– XXC4 –
U – V – W

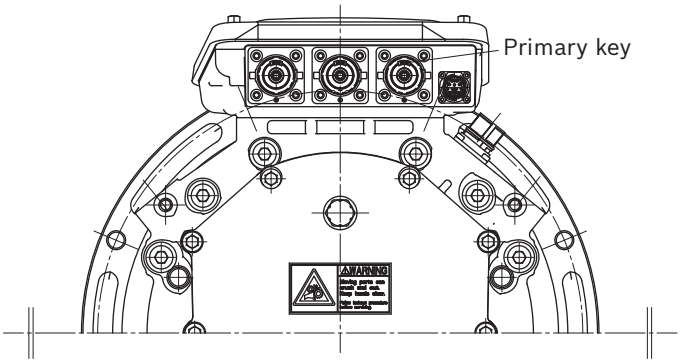

Standard design
Single connector C1
W.V.U. motor output for straight connection in A-shield direction
– XXC1 –
W – V – U

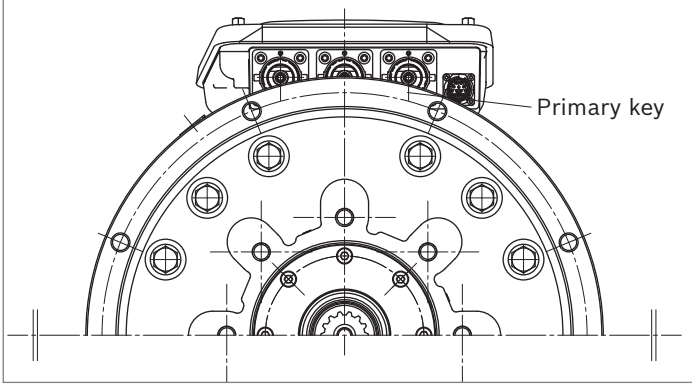

Standard design
Single connector C2
W.V.U. motor output for upward angled connection in A-shield direction
– XXC2 –
W – V – U

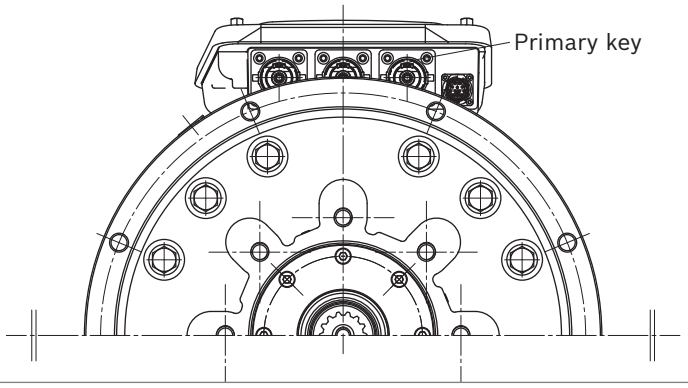

	L1	L2	L3	L4	L5	L6	L7	L8	N	m
EMP1–13F–XX–CX–N2P4	398	380	–	–	–	–	179	136.3	16	104 kg
EMP1–13H–XX–CX–N2P4	448	430	40	–	–	–	205	186.3	20	117 kg
EMP1–13J–XX–CX–N2P4	498	480	40	40	–	–	231	236.3	24	130 kg
EMP1–13L–XX–CX–N2P4	548	530	40	40	40	40	257	286.3	32	143 kg

▼ **EMP1-13 with single connector, internal splined shaft 14T 12/24 DP, pump flange 127-2 (C) (45° steps, variant N6G3)**

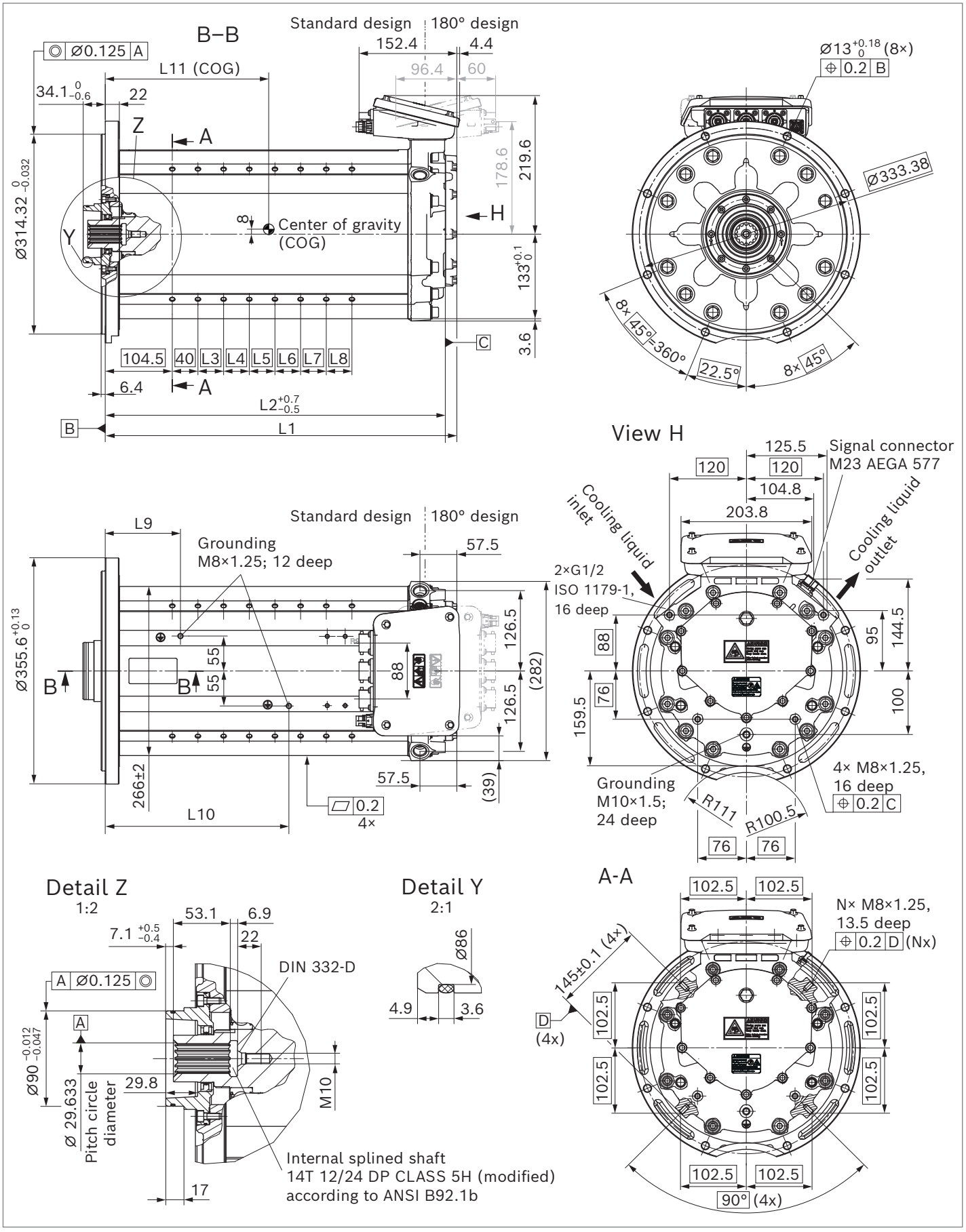

180° design
Single connector C3
U.V.W. motor output for downward angled or straight connection in B-shield direction
– XXC3 –
U – V – W

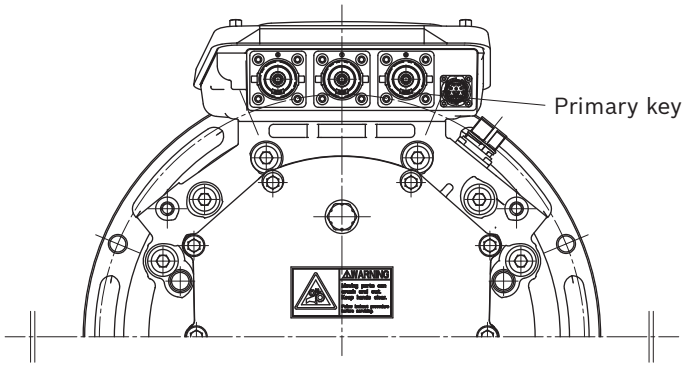

180° design
Single connector C4
U.V.W. motor output for upward angled connection in B-shield direction
– XXC4 –
U – V – W

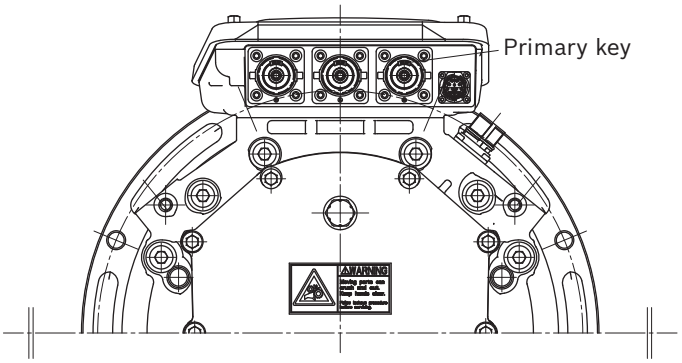

Standard design
Single connector C1
W.V.U. motor output for straight connection in A-shield direction
– XXC1 –
W – V – U

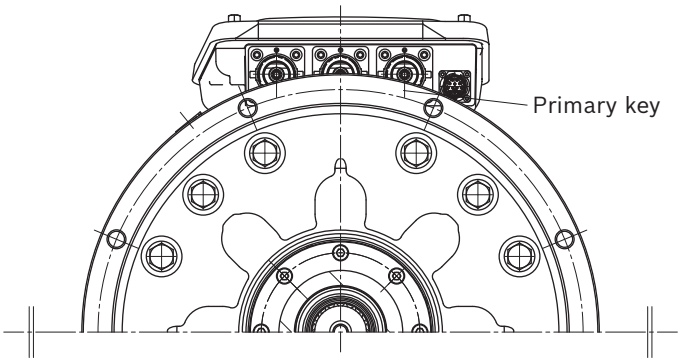

Standard design
Single connector C2
W.V.U. motor output for upward angled connection in A-shield direction
– XXC2 –
W – V – U

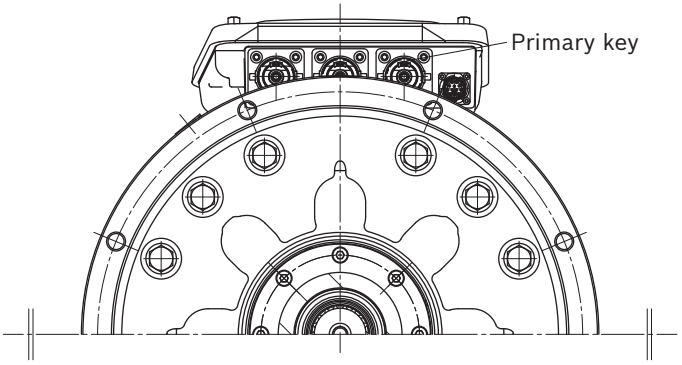

	L1	L2	L3	L4	L5	L6	L7	L8	L9	L10	L11	N	m
EMP1–13D–XX–CX–N6G3	348	330	40	–	–	–	–	–	77.5	77.5	151.6	8	87 kg
EMP1–13F–XX–CX–N6G3	398	380	40	40	–	–	–	–	95.5	114.5	176.6	16	101 kg
EMP1–13H–XX–CX–N6G3	448	430	40	40	40	–	–	–	95.5	164.5	201.9	20	115 kg
EMP1–13J–XX–CX–N6G3	498	480	40	40	40	40	–	–	95.5	214.5	227.0	24	129 kg
EMP1–13L–XX–CX–N6G3	548	530	40	40	40	40	40	40	95.5	264.5	252.2	32	143 kg

Mounting type

See operating instructions 96709-01-B

General

- Read the corresponding "operating instructions 96709-01-B" completely and thoroughly before using the motor. If necessary, this can be requested from Bosch Rexroth.
- Despite the greatest care being taken when compiling this document, it is impossible to consider all feasible applications. If information for your specific application is missing, please contact Bosch Rexroth.
- For further information about the motor, visit www.boschrexroth.com/elion-motors.

Bosch Rexroth AG
Glockeraustraße 2
89275 Elchingen
Germany
Phone +49 7308 82-0
info.ma@boschrexroth.de
www.boschrexroth.com

© Bosch Rexroth AG 2025. All rights reserved, also regarding any disposal, exploitation, reproduction, editing, distribution, as well as in the event of applications for industrial property rights. The data specified within only serve to describe the product. As our products are constantly being further developed, no statements concerning a certain condition or suitability for a certain application can be derived from our information. The information given does not release the user from the obligation of own judgment and verification. It must be remembered that our products are subject to a natural process of wear and aging.